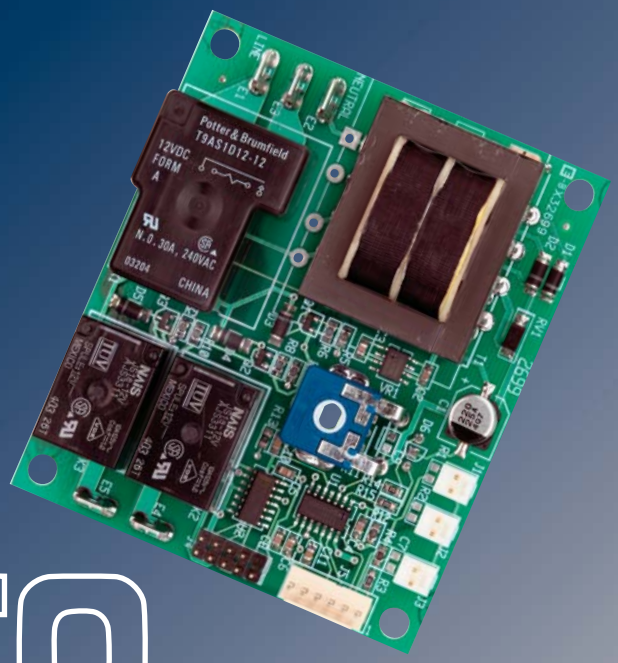

selco

SELCO PRODUCTS COMPANY

THERMOSTATS • ELECTRONIC CONTROLS

ISO 9001/AS 9100 Certified Quality System

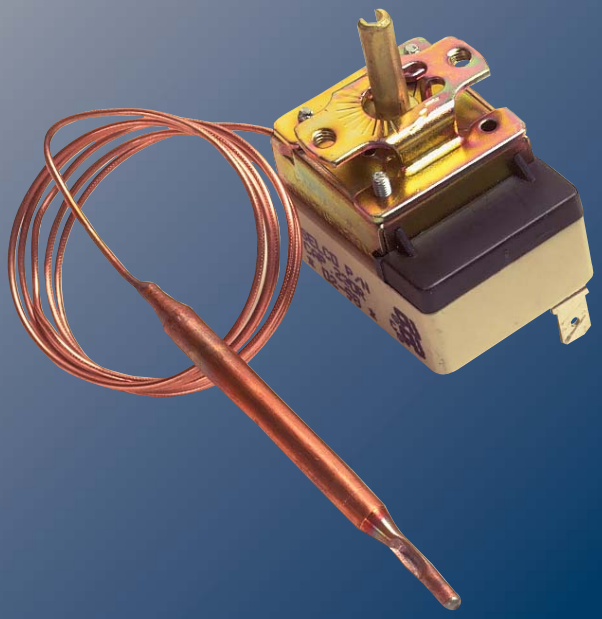

Our Service Makes The Difference

1/2" Disc Thermostats • 1/2" Disc Hermetically Sealed Thermostats • 3/4" Disc Thermostats • Encapsulated Thermostats • Thermal Protectors • Printed Circuit Board Thermostats • One-Shot Thermal Cut-offs • Probe Thermostats • Cold Capillary Thermostats • Adjustable Thermostats • Hot Bulb & Capillary Thermostats • Value Added Services • NTC Thermistors • PPTC Thermistors • CdS Photocells • Electronic Controls • Digital Panel Meters • Control Knobs

www.selcoproducts.com

Founded in 1958 by Bill Wilkinson, Selco Products' corporate headquarters is in Anaheim, California. Our sales force consists of direct and manufacture representatives throughout North America and Mexico. Every member of our customer support team is dedicated to - providing you with knowledgeable assistance, timely response to special requirements, and prompt delivery of your order.

Selco has manufacturing facilities in Anaheim, San Diego, China, Japan, Italy, and Brazil. While we manufacture our own line of electronic controls, we have exclusive agreements with select off-shore manufacturers to supply us with high quality electro-mechanical thermal components. Selco handles all marketing and distribution of their products in North America and we also assist with engineering, quality assurance, and UL approvals. This allows us to offer a very broad range of products at very competitive prices.

A full range of product lines are offered by Selco including thermal products, thermistors, control knobs, electronic controls, and digital panel meters. The thermal products line is comprised of automatic/manual reset bulb and capillary thermostats, cold capillary controls, hermetically sealed thermostats, high temperature thermostats, 1/2" and 3/4" disc thermostats, thermal cut-offs, thermal protectors, NTC (negative temperature coefficient) and PPTC (polymer positive temperature coefficient) thermistors. Control knobs include collet, push-on, slider, and accessories. Selco's line of electronic controls consist of digital temperature and time controllers, configurable controllers, digital timer modules, and relays. DC and AC voltmeters and ammeters, process monitors, setpoint comparators, thermometers, counters, tachometers, are offered in the digital panel meter line.

Selco services both OEM and end-user companies in the following industries:

- **HVAC**
- **Medical**
- **Appliances**
- **Electronics**
- **Food Service**
- **Process Controls**
- **Professional Audio**
- **Telecommunications**
- **Industrial Instrumentation**

Selco Strengths

- **JIT program**
- **FREE samples**
- **On-time delivery**
- **Kanban program**
- **One-year warranty**
- **Engineering support**
- **Value Added services**
- **Lead time - six weeks (approx.)**
- **Cost reduction over present source**
- **Same day shipping from Anaheim, CA**
- **Special packaging/labeling/bar coding**
- **Complete thermal component source**
- **Prompt, friendly, and courteous customer service**

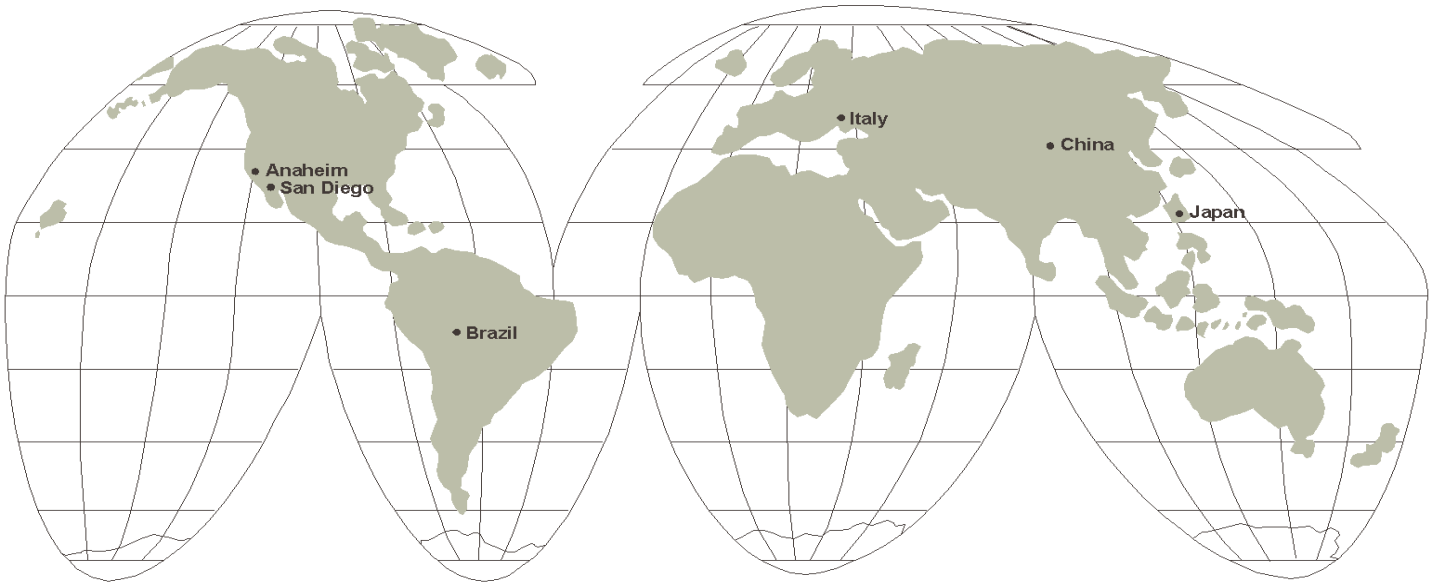

ISO 9001/AS 9100 Certified Quality System

SELCO PRODUCTS COMPANY
605 South East Street • Anaheim, CA 92805-4842
(800) 257-3526 • (714) 917-1333 • FAX (714) 917-1355
www.selcoproducts.com • E-mail: sales@selcoproducts.com

1/2” Disc Thermostats - Automatic Reset

CA/OA (602S) Series, Gold Contacts (602K)

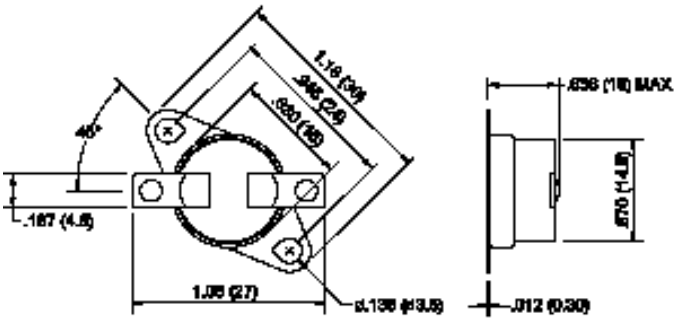

SPECIFICATIONS

Electrical ratings - Type S	125VAC, 15 Amps, Resistive, 100,000 Cycles 250VAC, 10 Amps, Resistive, 100,000 Cycles
Inductive load ratings	120VAC, 5.8FLA, 34.8LRA, 6,000 Cycles 240VAC, 2.9FLA, 17.4LRA, 6,000 Cycles
Electrical ratings - Type K	30VDC, 1 Amp, Resistive, 100,000 Cycles 120VAC, 125VA (pilot duty), 1 Amp
Temperature range *UL approved models*	50ºF to 302ºF (10ºC to 150ºC)
Non-UL approved models	302ºF to 320ºF (575ºC to 608ºC)
Differential	15ºF to 100ºF (8ºC to 56ºC)
Environmental temperature	32ºF to 350ºF (0ºC to 177ºC)
Insulation resistance	100M Ω or more (with a 500VDC megger)
Circuit resistance	50m Ω or less (initial value)
Dielectric strength	1,500VAC/1 minute
Approvals	UL File No. E145478(S), XAPX2 CSA File No. LR63201 VDE File No. 69046 Demko File No. DK-451, CE RoHS Compliant

This line of highly reliable switches utilize a temperature sensitive disc, electrically isolated from the switch. Contacts will open or close on rise when surface or ambient temperature increase to the snap point of the calibrated bimetal disc. The entire switch is enclosed in a phenolic dust-free housing. The bimetal disc is retained by a metal heat-conducting end cap.

The CA and OA Series thermostats are used in a variety of applications. They are produced in an ISO 9000 certified factory to insure safe and reliable operation. All models are 100% factory inspected for temperature, continuity and function.

Value Added options available including over-mold and seal. For details regarding Value Added options, see pages 48.

Models available from stock - subject to availability • CA - Close On-Rise (normally open) • OA - Open On-Rise (normally closed)

Close/Open On-Rise	Model Number	Open ºF	Close ºF	Mounting	Terminals	Orientation from Mounting Holes
Close	CA-50	32 ± 10	50 ± 7	surface	solder tabs	45º
Close	CA-60	40 ± 9	60 ± 7	surface	solder tabs	45º
Close	CA-60-QCV	40 ± 10	60 ± 7	surface	.250 quick connects, vertical	90º
Close	CA-85	67 ± 9	85 ± 7	surface	solder tabs	45º
Close	CA-85-PCB	55 ± 10	85 ± 7	air	printed circuit board	●
Close	CA-85-QC	67 ± 10	85 ± 7	surface	.187 quick connects, horizontal	45º
Close	CA-100	70 ± 10	100 ± 7	surface	solder tabs	45º
Close	CA-104-ST-18	86 ± 10	104 ± 8	6-32 stud	.250 quick connects, vertical	●
Close	CA-107-QCV	90 ± 10	107 ± 7	surface	.187 quick connects, vertical	90º
Close	CA-110	80 ± 10	110 ± 7	surface	solder tabs	45º
Close	CA-110-PCB	80 ± 10	110 ± 7	air	printed circuit board	●
Close	CA-110-QC45	80 ± 10	110 ± 7	surface	.187 quick connects, horizontal	45º
Close	CA-115-QC	100 ± 10	115 ± 7	rotating bracket	.250 quick connects, horizontal	●
Close	CA-120	90 ± 10	120 ± 7	surface	solder tabs	45º
Close	CA-120-QC	90 ± 10	120 ±7	surface	.250 quick connects, horizontal	90º
Close	CA-120-QCH	90 ± 10	120 ± 7	surface	.187 quick connects, horizontal	45º
Close	CA-120-QCV	90 ± 7	120 ± 10	surface	.250 quick connects, vertical	90º
Close	CA-130-QC	110 ± 10	130 ± 7	surface	.250 quick connects, vertical	45º
Close	CA-130-QCH	100 ± 10	130 ± 7	surface	solder tabs	90º
Close	CA-130-ST	112 ± 10	130 ± 7	8-32 stud	.250 quick connects, vertical	●
Close	CA-130-WOB	100 ± 10	130 ± 7	no bracket	solder tabs	45º
Close	CA-140	110 ± 10	140 ± 7	surface	solder tabs	45º
Close	CA-140-QC	110 ± 10	140 ± 7	surface	.250 quick connects, vertical	90º
Close	CA-140-QC18	122 ± 10	140 ± 7	rotating	.250 quick connects, vertical	●
Close	CA-150	120 ± 10	150 ± 7	surface	solder tabs	45º
Close	CA-160	130 ± 10	160 ± 7	surface	solder tabs	45º
Close	CA-160-QC	130 ± 10	160 ± 7	surface	.250 quick connects, horizontal	90º
Close	CA-160-QC15	145 ± 7	160 ± 10	surface	.250 quick connects, horizontal	90º
Close	CA-170	140 ± 10	170 ± 7	surface	solder tabs	45º

It is the customer’s sole responsibility to specify and determine the suitability of a particular control or component based on their unique individual applications and requirements

(714) 917-1333 • (800) 257-3526 • FAX (714) 917-1355 • E-mail: sales@selcoproducts.com

1/2” Disc Thermostats - Automatic Reset

CA/OA (602S) Series, Gold Contacts (602K)

Models available from stock - subject to availability • CA - Close On-Rise (normally open) • OA - Open On-Rise (normally closed)

Close/Open On-Rise	Model Number	Open ºF	Close ºF	Mounting	Terminals	Orientation from Mounting Holes
Close	CA-170-QC	140 ± 10	170 ± 7	surface	.250 quick connects, vertical	90º
Close	CA-170-WOB	140 ± 10	170 ± 7	no bracket	solder tabs	●
Close	CA-175-QC	145 ± 10	175 ± 7	surface	.250 quick connects, horizontal	90º
Close	CA-180	150 ± 10	180 ± 7	surface	solder tabs	45º
Close	CA-180-QCV	150 ± 10	180 ± 7	rotating	.250 quick connects, vertical	●
Close	CA-185-ST	145 ± 10	185 ± 7	6-32 stud	.250 quick connects	●
Close	CA-190	169 ± 10	190 ± 7	surface	solder tabs	45º
Close	CA-190-QC	172 ± 10	190 ± 7	surface	.250 quick connects, vertical	90º
Close	CA-200	170 ± 10	200 ± 7	surface	solder tabs	45º
Close	CA-205	175 ± 10	205 ± 7	surface	solder tabs	45º
Close	CA-205-ST	175 ± 10	205 ± 7	6-32 stud	.250 quick connects @ 30º	●
Close	CA-210-QC	180 ± 10	210 ± 7	surface	.187 quick connects, vertical	90º
Close	CA-225	195 ± 10	225 ± 7	surface	solder tabs	45º
Close	CA-230-QC	203 ± 7	230 ± 10	rotating bracket	.187 quick connects, horizontal	●
Close	CA-230-STG	185 ± 10	230 ± 7	6-32 stud	.187 quick connects, vertical	●
Close	CA-240	210 ± 10	240 ± 7	surface	solder tabs	45º
Close	CA-270	240 ± 10	270 ± 7	surface	solder tabs	45º
Close	CA-270-QCV	240 ± 7	270 ± 10	surface	.187 quick connects, vertical	45º
Close	CA-300	270 ± 10	300 ± 7	surface	solder tabs	45º
Open	OA-50	50 ± 5	32 ± 10	surface	solder tabs	45º
Open	OA-60	60 ± 5	40 ± 7	surface	solder tabs	45º
Open	OA-60-PCB	60 ± 5	40 ± 7	air	printed circuit board	●
Open	OA-60-QCR	60 ± 5	40 ± 10	rotating	.250 quick connects, vertical	●
Open	OA-60-QCV	60 ± 5	40 ± 10	surface	.250 quick connects, vertical	90º
Open	OA-60-WOB	60 ± 5	40 ± 9	no bracket	solder tabs	●
Open	OA-70	70 ± 5	50 ± 10	surface	solder tabs	45º
Open	OA-80	80 ± 5	50 ± 9	surface	solder tabs	45º
Open	OA-80-PCB	80 ± 5	50 ± 10	air	printed circuit board	●
Open	OA-80-QCV	80 ± 5	50 ± 9	surface	.250 quick connects, vertical	90º
Open	OA-85	85 ± 5	67 ± 9	surface	solder tabs	45º
Open	OA-95-QC	95 ± 5	77 ± 9	surface	.250 quick connects, horizontal	90º
Open	OA-100	100 ± 5	70 ± 10	surface	solder tabs	45º
Open	OA-100-QC	100 ± 5	85 ± 10	surface	.250 quick connects, horizontal	90º
Open	OA-110	110 ± 5	80 ± 10	surface	solder tabs	45º
Open	OA-110-QC	110 ± 5	80 ± 10	rotating bracket	.250 quick connects, horizontal	●
Open	OA-120	120 ± 5	90 ± 10	surface	solder tabs	45º
Open	OA-120-15-45	120 ± 5	105 ± 10	surface	solder tabs	45º
Open	OA-120-QC	120 ± 5	90 ± 10	surface	.250 quick connects, vertical	90º
Open	OA-120-QCH	120 ± 5	90 ± 10	surface	.250 quick connects, horizontal	45º
Open	OA-130	130 ± 5	100 ± 10	surface	solder tabs	45º
Open	OA-130-ST	130 ± 5	100 ± 10	10-32 stud	.250 quick connects, horizontal	●
Open	OA-140	140 ± 5	110 ± 10	surface	solder tabs	45º
Open	OA-140-QCV	140 ± 5	110 ± 10	surface	.250 quick connects, vertical	90º
Open	OA-150	150 ± 5	120 ± 10	surface	solder tabs	45º
Open	OA-150-PCB	150 ± 5	120 ± 10	air	printed circuit board	90º
Open	OA-150-QCC	150 ± 5	120 ± 10	surface	.250 quick connects, vertical	●
Open	OA-158-ST	158 ± 5	118 ± 10	6-32 stud	.250 quick connects	●
Open	OA-160	160 ± 5	130 ± 10	surface	solder tabs	45º
Open	OA-160-QC20	160 ± 5	140 ± 10	surface	.250 quick connects, horizontal	90º
Open	OA-160-QCH	160 ± 5	130 ± 10	surface	.187 quick connects, horizontal	45º
Open	OA-160-QCV20	160 ± 5	140 ± 10	surface	.250 quick connects, vertical	90º
Open	OA-165-145	165 ± 5	145 ± 9	surface	.250 quick connects, vertical	90º
Open	OA-170	170 ± 5	140 ± 10	surface	solder tabs	45º
Open	OA-170-PCB	170 ± 5	140 ± 10	air	printed circuit board	●
Open	OA-170-WOB	170 ± 5	140 ± 10	no bracket	.187 quick connects, horizontal	●
Open	OA-175	175 ± 5	157 ± 10	surface	solder tabs	45º
Open	OA-175-QC	175 ± 5	145 ± 10	surface	.250 quick connects, vertical	45º
Open	OA-175-QCH	175 ± 5	157 ± 10	surface	.250 quick connects, horizontal	45º
Open	OA-175-S2	175 ± 6	145 ± 10	10-32 stud	.250 quick connects, horizontal	●
Open	OA-180	180 ± 5	150 ± 10	surface	solder tabs	45º

It is the customer’s sole responsibility to specify and determine the suitability of a particular control or component based on their unique individual applications and requirements

(714) 917-1333 • (800) 257-3526 • FAX (714) 917-1355 • E-mail: sales@selcoproducts.com

1/2” Disc Thermostats - Automatic Reset

CA/OA (602S) Series, Gold Contacts (602K)

Models available from stock - subject to availability • CA - Close On-Rise (normally open) • OA - Open On-Rise (normally closed)

Close/Open On-Rise	Model Number	Open ºF	Close ºF	Mounting	Terminals	Orientation from Mounting Holes
Open	OA-180-QC	180 ± 5	150 ± 10	surface	.187 quick connects, horizontal	45º
Open	OA-180-QCV	180 ± 5	150 ± 10	surface	.250 quick connects, vertical	45º
Open	OA-180-QCVR	180 ± 5	150 ± 10	rotating bracket	.250 quick connects, vertical	●
Open	OA-185-QC18	185 ± 10	167 ± 10	rotating bracket	.250 quick connects, vertical	●
Open	OA-185-QCP	185 ± 5	154 ± 10	surface	.250 quick connects, vertical	90º
Open	OA-185-ST10	185 ± 5	131 ± 10	10-32 stud	.250 quick connects, horizontal	●
Open	OA-190	190 ± 5	160 ± 10	surface	solder	45º
Open	OA-190-QC	190 ± 7	172 ± 10	surface	.250 quick connects, vertical	45º
Open	OA-194-QC	194 ± 5	164 ± 10	surface	.187 quick connects, vertical	45º
Open	OA-194-QC18	194 ± 5	176 ± 10	surface	.250 quick connects, horizontal	90º
Open	OA-194-QCC	194 ± 5	153 ± 10	surface	.250 quick connects, vertical	90º
Open	OA-200	200 ± 5	170 ± 10	surface	solder	45º
Open	OA-200-QC	200 ± 5	181 ± 10	surface	.250 quick connects, vertical	90º
Open	OA-200-QCV	200 ± 5	170 ± 10	surface	.250 quick connects, vertical	45º
Open	OA-200-QCV-90	200 ± 5	170 ± 10	surface	.250 quick connects, vertical	90º
Open	OA-200-ST	200 ± 5	170 ± 8	10-32 stud	.250 quick connects	●
Open	OA-203-QCP	203 ± 5	163 ± 10	surface	.250 quick connects, vertical	90º
Open	OA-203-QCV	203 ± 5	167 ± 10	surface	.250 quick connects, vertical	90º
Open	OA-203-ST	203 ± 5	163 ± 10	10-32 stud	.250 quick connects	●
Open	OA-210	210 ± 5	180 ± 10	surface	solder	45º
Open	OA-210-QC	210 ± 5	180 ± 10	surface	.187 quick connects, horizontal	45º
Open	OA-210-QCR	210 ± 5	195 ± 10	rotating bracket	.250 quick connects, horizontal	●
Open	OA-210-QCV	210 ± 5	180 ± 10	surface	.250 quick connects, vertical	45º
Open	OA-212-QCP	212 ± 5	167 ± 10	surface	.250 quick connects, vertical	90º
Open	OA-220	220 ± 5	190 ± 10	surface	solder	45º
Open	OA-220-PCB	220 ± 5	190 ± 10	air	printed circuit board	●
Open	OA-220-QC	220 ± 5	190 ± 10	surface	.250 quick connects, horizontal	45º
Open	OA-225-205	225 ± 5	205 ± 10	surface	.250 quick connects, vertical	90º
Open	OA-230	230 ± 5	200 ± 10	surface	solder	45º
Open	OA-230-QCV	230 ± 7	200 ± 10	surface	.250 quick connects, vertical	90º
Open	OA-239-ST	239 ± 7	189 ± 10	6-32 stud	.250 quick connects	●
Open	OA-240-QCV	240 ± 7	200 ± 10	surface	.250 quick connects, vertical	90º
Open	OA-250	250 ± 7	220 ± 10	surface	solder	45º
Open	OA-250-PCB	250 ± 5	220 ± 10	air	printed circuit board	●
Open	OA-250-QC	250 ± 5	220 ± 10	surface	.187 quick connects, horizontal	45º
Open	OA-250-QCA	250 ± 7	220 ± 10	surface	.250 quick connects, horizontal	45º
Open	OA-265-QCA	265 ± 7	235 ± 10	air	.250 quick connects, vertical	90º
Open	OA-270-90	270 ± 7	240 ± 10	surface	solder	90º
Open	OA-275-QCH	275 ± 7	245 ± 10	surface	.250 quick connects, horizontal	45º
Open	OA-280	280 ± 7	250 ± 10	surface	solder	45º
Open	OA-280-QC	280 ± 7	250 ± 10	surface	.250 quick connects, vertical	45º
Open	OA-300	300 ± 7	270 ± 10	surface	solder	45º
Open	OA-300-QC	300 ± 7	220 ± 14	rotating bracket	.250 quick connects, vertical	●
Open	OA-300-QCVR	300 ± 7	270 ± 10	rotating bracket	.250 quick connects, vertical	●

It is the customer’s sole responsibility to specify and determine the suitability of a particular control or component based on their unique individual applications and requirements

(714) 917-1333 • (800) 257-3526 • FAX (714) 917-1355 • E-mail: sales@selcoproducts.com

1/2” Disc Thermostats - Manual Reset

OM (603U-H) Series, Gold Contacts (603K)

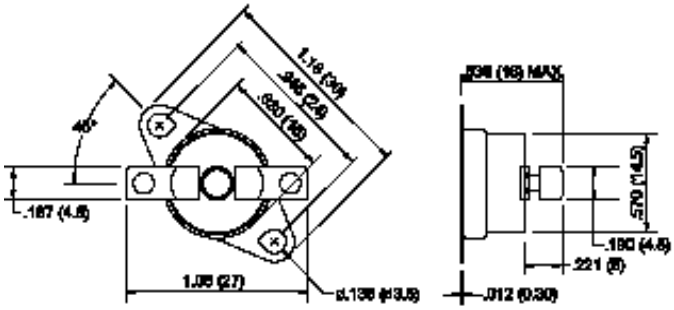

SPECIFICATIONS

Electrical ratings - Type U-H	125VAC, 15 Amps, Resistive, 6,000 Cycles 250VAC, 10 Amps, Resistive, 6,000 Cycles
Inductive load ratings	120VAC, 5.8FLA, 34.8LRA, 12 Amps, 6,000 Cycles 250VAC, 2.9FLA, 17.4LRA, 6,000 Cycles
Electrical ratings - Type K *(Type K not VDE approved)*	30VDC, 1 Amp, Resistive, 6,000 Cycles 120VAC, 125VA (pilot duty), 6,000 Cycles
Temperature range *UL approved models*	120ºF to 302ºF (50ºC to 150ºC)
Non-UL approved models	302ºF to 320ºF (575ºC to 608ºC)
Manual reset	30% below operating temperature
Automatic reset	-40ºF
Environmental temperature	32ºF to 350ºF (0ºC to 177ºC)
Insulation resistance	100M Ω or more (with a 500VDC megger)
Circuit resistance	50m Ω or less (initial value)
Dielectric strength	1,500VAC/1 minute
Approvals	UL File No. E145478(S), XAPX2 C-UL File No. E145478(S), XAPX8 CSA File No. LR63201 VDE File No. 135151 (Type U-H only) RoHS Compliant

APPLICATIONS

- Fireplaces
- Vacuum cleaners
- Food service equipment

This line of highly reliable switches utilize a snap-action bimetal disc, electrically and thermally isolated from the switch. The contacts are normally closed and open on rise when surface or ambient temperature set point is reached. The circuit will remain open until the manual reset button is depressed at approximately 30% below operating temperature. All models are 100% temperature tested which can be calibrated to your specification at the factory.

Value Added options available including over-mold and seal. For details regarding Value Added options, see pages 48.

Models available from stock - subject to availability • OM Series - Open On-Rise (normally closed)

Open On-Rise	Model Number	Open ºF	Mounting	Terminals	Orientation from Mounting Holes
Open	OM-140-QC	140 ± 10	surface	.250 quick connects, horizontal	90º
Open	OM-150-QCV	150 ± 10	rotating bracket	.250 quick connects, vertical	●
Open	OM-160	160 ± 10	surface	solder	45º
Open	OM-180-QC	180 ± 10	surface	.187 quick connects, horizontal	45º
Open	OM-194	194 ± 10	surface	solder	90º
Open	OM-195-QC	195 ± 10	rotating bracket	.250 quick connects, horizontal	●
Open	OM-200-QCV	200 ± 10	surface	.250 quick connects, vertical	90º
Open	OM-212-QC	212 ± 10	rotating bracket	.250 quick connects, horizontal	●
Open	OM-225-QC	225 ± 10	rotating bracket	.250 quick connects, horizontal	●
Open	OM-250	250 ± 10	surface	solder	45º
Open	OM-250-QC	250 ± 10	surface	.250 quick connects, horizontal	45º
Open	OM-260-SO	260 ± 7	6-32 stud	.250 quick connects, horizontal	●
Open	OM-265-A	265 ± 10	air	solder	45º
Open	OM-285-QC	285 ± 10	surface	.250 quick connects, horizontal	45º
Open	OM-302-QCV	302 ± 10	surface	.250 quick connects, vertical	90º
Open	OM-320	320 ± 10	surface	solder	45º
Open	OM-320-QC	320 ± 10	surface	.250 quick connects, horizontal	45º

It is the customer’s sole responsibility to specify and determine the suitability of a particular control or component based on their unique individual applications and requirements

(714) 917-1333 • (800) 257-3526 • FAX (714) 917-1355 • E-mail: sales@selcoproducts.com

Special Order Brackets

For CA/OA (602S & 602K) and OM (603U-H & 603K) Series

Code AS
Stainless • Fixed • Surface

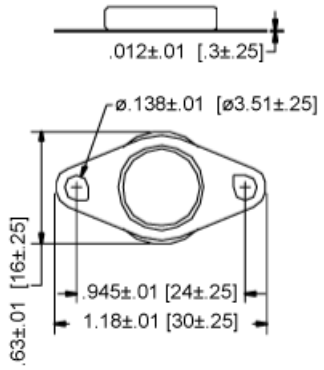

Code AU
Stainless • Fixed • Surface

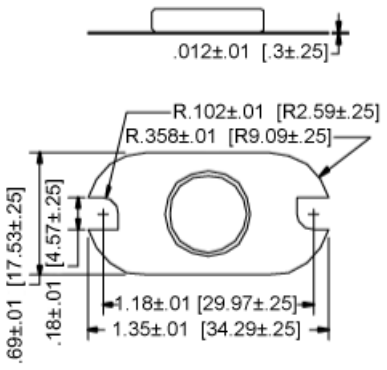

Code BO
Aluminum • No Bracket

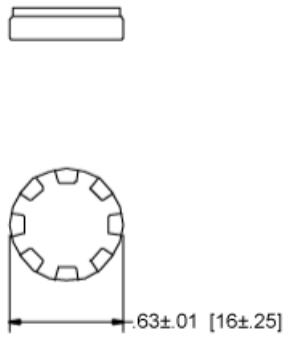

Code IO
Stainless • Fixed Air

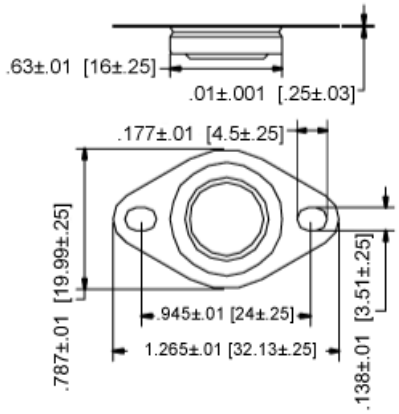

Code QL
Stainless • Fixed • Surface • Aluminum Cap

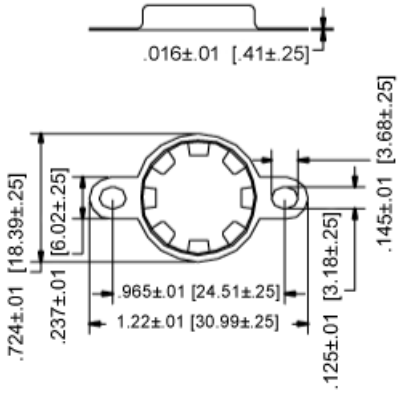

Code QF
Stainless • Fixed • Surface

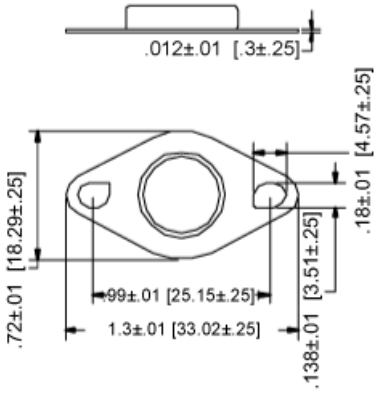

Code B

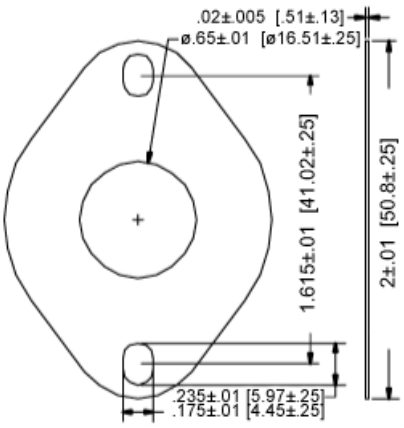

Stud Mount - Brass

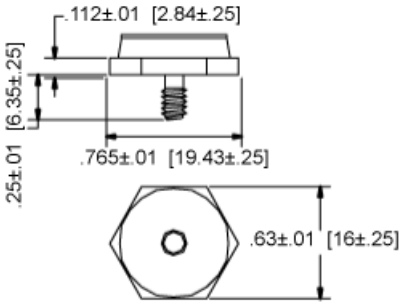

Stud Mount Available In

Code SO (6-32)	**Code SM3 (M3)**
Code ST (8-32)	**Code SM4 (M4)**
Code S2 (10-32)	

Code FF
Stainless • Moveable

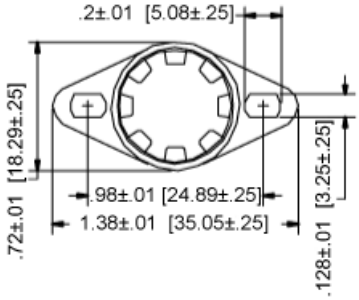

It is the customer's sole responsibility to specify and determine the suitability of a particular control or component based on their unique individual applications and requirements

(714) 917-1333 • (800) 257-3526 • FAX (714) 917-1355 • E-mail: sales@selcoproducts.com

Special Order Terminals

For CA/OA (602S & 602K) and OM (603U-H & 603K) Series

Code SH
Solder • Horizontal

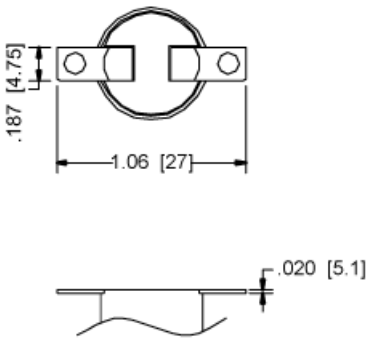

Code SV
Solder • Vertical

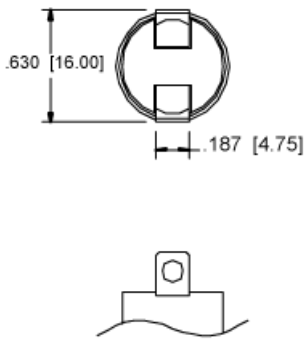

Code BH
.250 Quick Connects • Horizontal

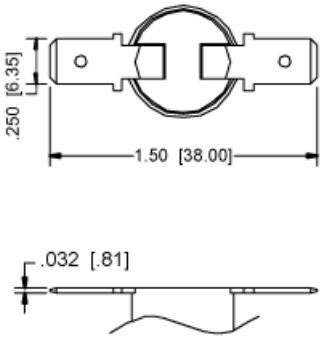

Code BV
.250 Quick Connects • Vertical

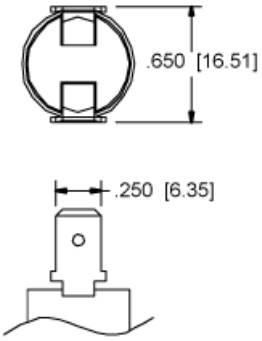

Code TH
.187 Quick Connects • Horizontal

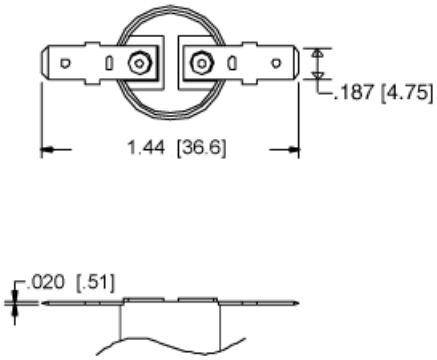

Code TV
.187 Quick Connects • Vertical

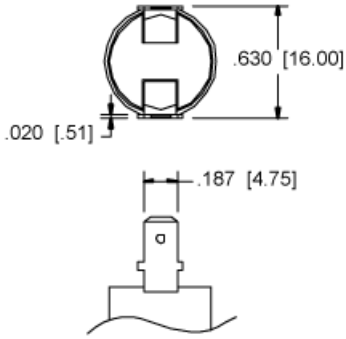

Code BQF
.250 Quick Connects @ 30º

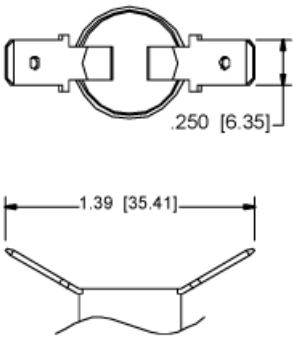

Code PCB
Printed Circuit Board

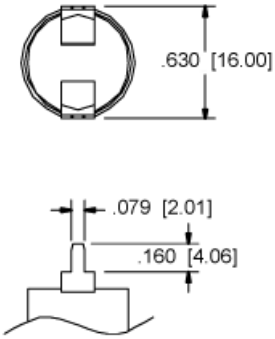

Code T3H
.187 Quick Connects • Horizontal

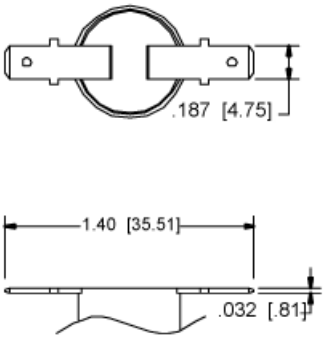

It is the customer's sole responsibility to specify and determine the suitability of a particular control or component based on their unique individual applications and requirements

(714) 917-1333 • (800) 257-3526 • FAX (714) 917-1355 • E-mail: sales@selcoproducts.com

1/2” Disc Thermostats - Automatic Reset

CR/OR (622A and 622P) Series

CR/OR (622A) Series - Standard Case

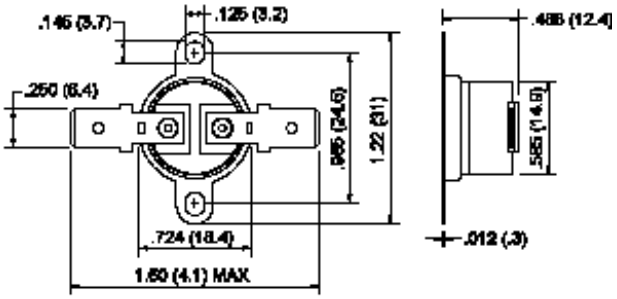

622P Series - 4 Post Design (pictured above)

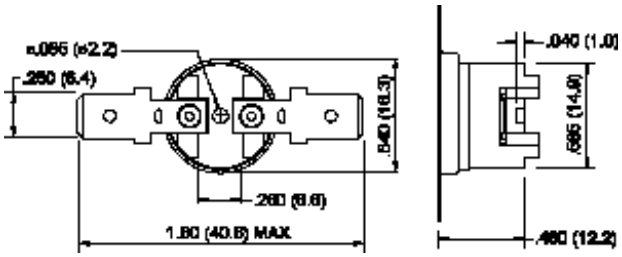

FEATURES

- 4-post design
- High temperature polyester
- Approval by UL, CSA, VDE, CE

APPLICATIONS

- Coffee makers
- Microwave ovens
- Sandwich makers

These SPST, snap-action disc thermostats are suitable for a drip-type coffee maker temperature limiting/regulating control. They are preset and tamper proof.

Each device is 100% tested and inspected before leaving the factory.

Gold contacts available upon request. Value Added options available including over-mold and seal. For details regarding Value Added options, see pages 48

SPECIFICATIONS

Electrical ratings	125VAC, 15 Amps, Resistive, 100,000 Cycles 250VAC, 10 Amps, Resistive, 100,000 Cycles
Temperature range	50ºF to 365ºF (10ºC to 185ºC)
Differential	18ºF to 45ºF (10ºC to 25ºC)
Environmental temperature	-4ºF to 392ºF (-20ºC to 200ºC)
Coffee maker, normal & dry override/over shoot	455ºF (235ºC)
Insulation resistance	100M Ω or more (with a 500VDC megger)
Circuit resistance	50m Ω or less (initial value)
Dielectric strength	1,500VAC/1 minute
Approvals	UL File No. E145478(S), XAPX2 CSA File No. LR63201 VDE File No. F-14713, CE RoHS Compliant

Models available from stock - subject to availability • CR - Close On-Rise (normally open) • OR - Open On-Rise (normally closed)

Open On-Rise	Model Number	Open ºF	Close ºF	Mounting	Terminals
Open	OR-222*	222 ± 5	168 ± 10	no bracket	.250 quick connects, horizontal
Open	OR-285*	285 ± 7	245 ± 11	no bracket	.250 quick connects, horizontal
Open	OR-325**	325 ± 7	275 ± 11	rotating bracket	solder, horizontal
Open	OR-350-QC**	350 ± 9	320 ± 12	rotating bracket	.250 quick connects, horizontal
Open	OR-350-QCV**	350 ± 9	320 ± 12	rotating bracket	.250 quick connects, vertical
Open	OR-365-QC**	365 ± 9	335 ± 12	rotating bracket	.250 quick connects, horizontal

* 4-Post design
** Standard case

It is the customer’s sole responsibility to specify and determine the suitability of a particular control or component based on their unique individual applications and requirements

(714) 917-1333 • (800) 257-3526 • FAX (714) 917-1355 • E-mail: sales@selcoproducts.com

1/2” Disc Thermostats - Automatic Reset

CRA/ORA (625A) Series

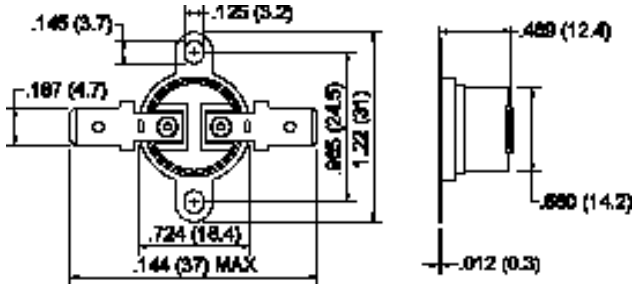

FEATURES

- ISO 9000 certification
- High temperature case
- Quick and easy installation

APPLICATIONS

- Heaters
- Gas furnaces
- Commercial food equipment

SPECIFICATIONS

Electrical ratings	125VAC, 15 Amps, Resistive, 100,000 Cycles 250VAC, 10 Amps, Resistive, 100,000 Cycles
Temperature range	50ºF to 500ºF (10ºC to 260ºC)
Differential	27ºF to 100ºF (15ºC to 55ºC)
Environmental temperature	-4ºF to 554ºF (-20ºC to 290ºC)
Insulation resistance	100M Ω or more (with a 500VDC megger)
Circuit resistance	50m Ω or less (initial value)
Dielectric strength	1,500VAC/1 minute
Approvals	UL File No. E145478(S), XAPX2 C-UL File No. E145478(S), XAPX8 VDE, CE RoHS Compliant

These snap-action bimetal discs are housed in a ceramic case to handle extremely high temperatures. The increased factory calibrated set points are available up to 500ºF (260ºC). The contacts can either open or close on temperature rise.

All models are 100% temperature tested before leaving the factory.

Gold contacts available upon request. Value Added options available including over-mold and seal. For details regarding Value Added options, see pages 48.

Models available from stock - subject to availability • CRA - Close On-Rise (normally open) • ORA - Open On-Rise (normally closed)

Open On-Rise	Model Number	Open ºF	Close ºF	Mounting	Terminals
Open	ORA-257-QCV	257 ± 9	230 ± 9	rotating bracket	.250 quick connects, vertical
Open	ORA-347-QCV	347 ± 16	284 ± 16	rotating bracket	.250 quick connects, vertical
Open	ORA-350-QC	350 ± 14	290 ± 20	rotating bracket	.187 quick connects, horizontal
Open	ORA-375-QC	375 ± 14	315 ± 20	rotating bracket	.250 quick connects, horizontal
Open	ORA-400-QC	400 ± 14	340 ± 20	rotating bracket	.250 quick connects, horizontal
Open	ORA-425-QC	425 ± 15	375 ± 20	rotating bracket	.250 quick connects, horizontal
Open	ORA-450-QC	450 ± 15	370 ± 20	rotating bracket	.250 quick connects, horizontal
Open	ORA-500-QC	500 ± 20	420 ± 20	rotating bracket	.250 quick connects, horizontal
Open	ORA-500-QCV50	500 ± 20	450 ± 20	rotating bracket	.250 quick connects, vertical

Note: Single operation (one-shot) feature is available. Once the contacts have opened, the contacts will not reclose until ambient temperature drops below -31ºF (-35ºC).

It is the customer’s sole responsibility to specify and determine the suitability of a particular control or component based on their unique individual applications and requirements

(714) 917-1333 • (800) 257-3526 • FAX (714) 917-1355 • E-mail: sales@selcoproducts.com

Special Order Brackets

For CR/OR (622A and 622P) and CRA/ORA (625A) Series

Code BO
Aluminum • No Bracket

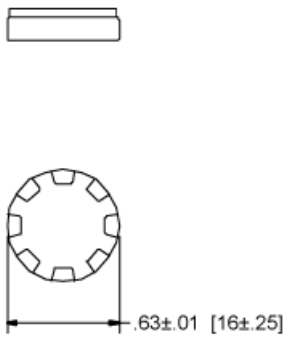

Code QL
Stainless • Moveable • Surface • Aluminum Cap

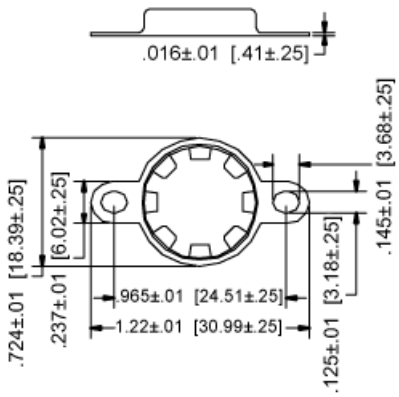

Code IO
Stainless • Fixed • Air

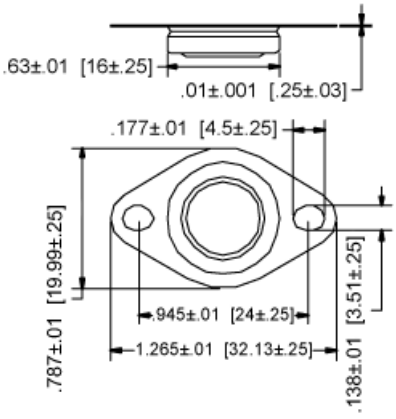

Code FF
Stainless • Moveable • Surface
Available for 622 Series only

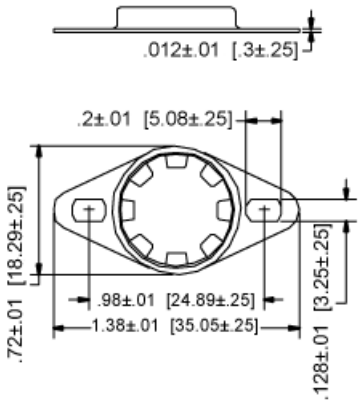

Code QD
Stainless • Moveable • Surface

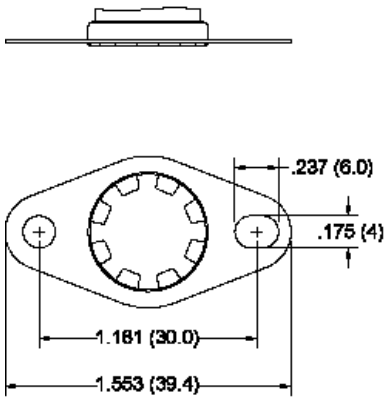

It is the customer's sole responsibility to specify and determine the suitability of a particular control or component based on their unique individual applications and requirements

(714) 917-1333 • (800) 257-3526 • FAX (714) 917-1355 • E-mail: sales@selcoproducts.com

Special Order Terminals

For CR/OR (622A and 622P) and CRA/ORA (625A) Series

Code BV
.250 Quick Connects • Vertical

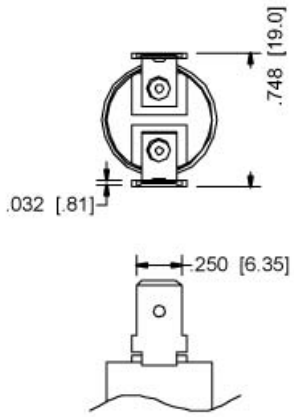

Code BH
.250 Quick Connects • Horizontal

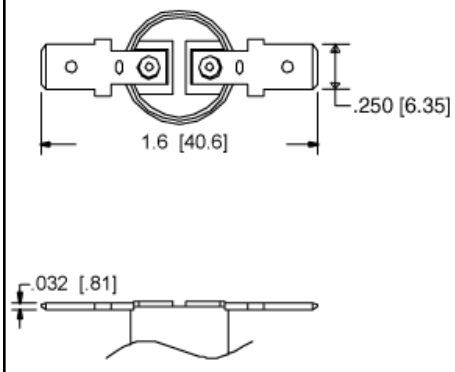

Code TV
.187 Quick Connects • Vertical

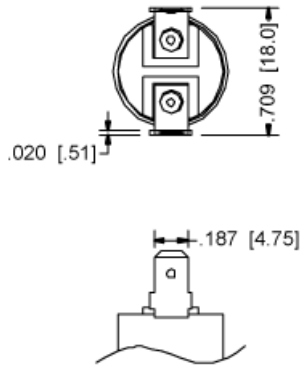

Code TH
.187 Quick Connects • Horizontal

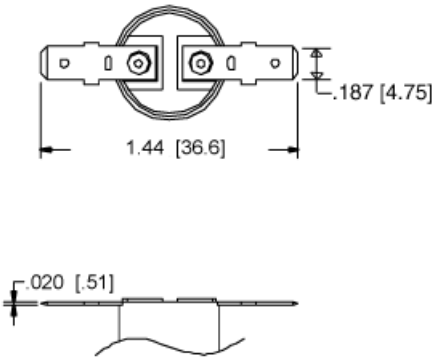

Code SH
Solder Tabs • Horizontal

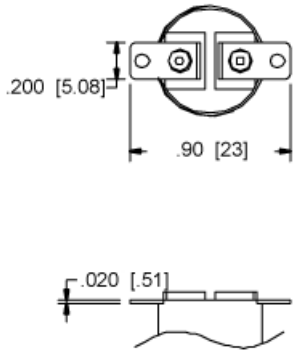

It is the customer's sole responsibility to specify and determine the suitability of a particular control or component based on their unique individual applications and requirements

(714) 917-1333 • (800) 257-3526 • FAX (714) 917-1355 • E-mail: sales@selcoproducts.com

Special Order Map

For CA/OA , OM, CR/OR, and CRA/ORA Series

Build Your Own Part

Model	Contacts	Function	Terminal Type	Bracket Type	Terminal Orientation	Set Point	ºF/ºC	Differential

Model

602S	CA/OA Series - 1/2” Automatic Reset	refer to pages 5-7
603U-H	OM Series - 1/2” Manual Reset	refer to page 8
622A	CR/OR Series - Standard Case - 1/2” Automatic Reset	refer to page 11
622P	CR/OR - 4-Post Case - 1/2” Automatic Reset	refer to page 11
625A	CRA/ORA - High Temperature - 1/2” Automatic Reset	refer to page 12

Contacts

S	Silver contacts
K	Gold contacts

Function

X	Open on-rise (normally closed)
Y	Close on-rise (normally open)

Terminal Type

Models CA/OA (602S) and OM (603U-H)	refer to page 10
Models CR/OR (622A and 622P) and CRA/ORA (625A)	refer to page 14

Bracket Type

Models CA/OA (602S) and OM (603U-H)	refer to page 9
Models CR/OR (622A and 622P) and CRA/ORA (625A)	refer to page 13

Terminal Orientation

0º
45º
90º

Example Part Number

602	S	X	BV	AS	90	145	ºF	30
Model	Contacts	Function	Terminal Type	Bracket Type	Terminal Orientation	Set Point	ºF/ºC	Differential

It is the customer’s sole responsibility to specify and determine the suitability of a particular control or component based on their unique individual applications and requirements

(714) 917-1333 • (800) 257-3526 • FAX (714) 917-1355 • E-mail: sales@selcoproducts.com

Hermetically Sealed 1/2” Disc Thermostats

KC/KO (4344) Series

The Selco hermetically sealed thermostat is a snap-action disc control. Its welded, hermetically sealed construction was designed for applications where maximum shock and vibration resistance is required. The steel case provides protection from dust and moisture. Terminals are a solder type or weld and lead wires are available.

Gold contacts are available upon request.

FEATURES

- Compact size
- Hermetically sealed
- Extreme low & high temps.

APPLICATIONS

- Military
- Aerospace
- Water temperature control

SPECIFICATIONS

Dielectric strength	125VAC, rms, 60 cycles for 1 minute, terminal to case; per MIL-STD-202, Method 301
Switch action	SPST (snap-action)
Ambient temperature	-80ºF to +550º (-62ºC to 288ºC)
Contact resistance	0.050 Ω per max. per MIL-STD-202, Method 307
Shock resistance	100G, 6 milliseconds, per MIL-STD-202, Method 213
Vibration resistance	5-2000 cps, 20G per MIL-STD-202, Method 204, Condition D
Moisture resistance	MIL-STD-202, Method 106
Salt spray	MIL-STD-202, Method 101, Condition B, 5% solution
Leakage	1 x 10^{-5} ATM cc/sec. max., per MIL-STD-202, Method 112, Condition C
Approvals	UL File No. 34618 ***UL File Number found under Texas Instr. 4344*** CSA File No. LR4458 RoHS Compliant

Models available from stock - subject to availability
KO - Open On-Rise (normally closed)

Model Number	Open ºF	Differential
KO-550	550 ± 25	80ºF

Temperature Settings - Special Order

Operating Temp. Range (ºF)	Available Differential Range ºF			Opening Temp. Tol (±ºF)	Closing Temp. Tol (±ºF)
	Min.	Std.	Max.		
-65 to -1	25	30	80	10	8
0 to 200	9	20	80	5	5
201 to 300	20	30	80	8	6
301 to 450	30	40	80	12	12
451 to 550	60	70	80	25	25

Contact Ratings (Resistive)

30VAC/DC	125VAC	250VAC	Life Cycles
Amperes			
5.0	2.5	1.0	100,000
5.5	3.0	1.5	50,000
6.0	4.0	2.0	25,000
6.5	5.0	2.5	10,000
7.0	6.0	3.0	5,000

Special Mounting Configurations

Terminal Dimensions

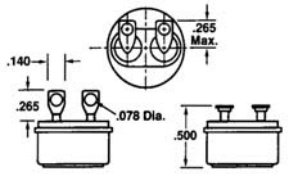

4344-7

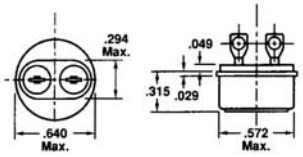

4344-184

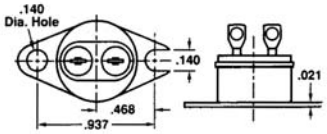

Loose Bracket

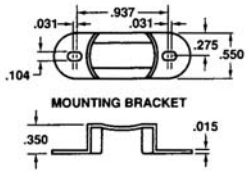

4344-32

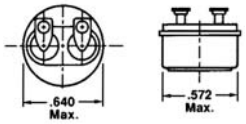

4344-144

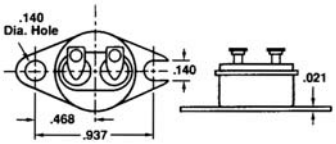

4344-145

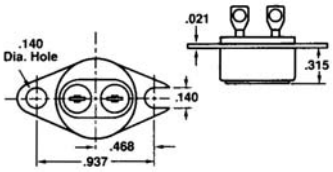

4344-13

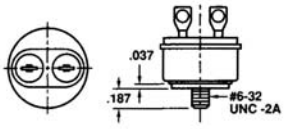

4344-14

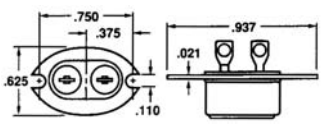

4344-221

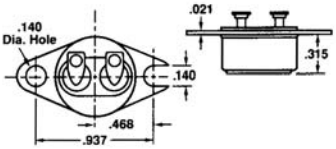

4344-135

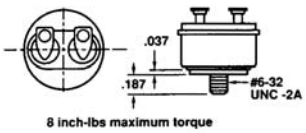

4344-63

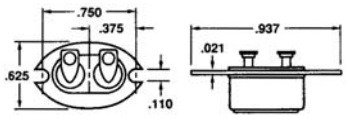

It is the customer’s sole responsibility to specify and determine the suitability of a particular control or component based on their unique individual applications and requirements

(714) 917-1333 • (800) 257-3526 • FAX (714) 917-1355 • E-mail: sales@selcoproducts.com

3/4” Disc Thermostats - Automatic Reset

SE (T10) Series - Airstream Mount

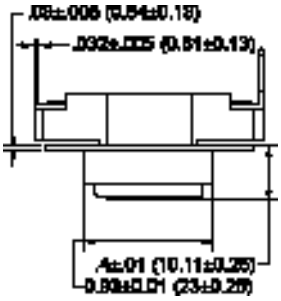

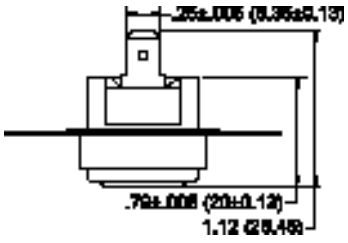

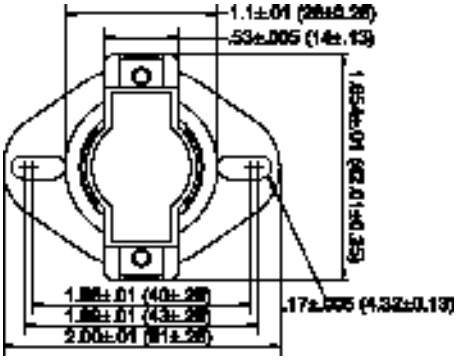

FEATURES

- 25 Amp capacity
- UL and CUL approved
- Factory calibrated to your specifications

APPLICATIONS

- H.V.A.C.
- Major appliances
- Medical/Lab equipment
- Commercial food eqpt.

Selco’s direct sensing thermostats are larger than our standard thermostats, giving them an even more powerful bimetallic disc and a higher electrical rating. They are ideal for use with heating and air conditioning systems as well as with industrial equipment. These models are designed for maximum airflow around the thermostat to give quick and accurate response.

These units feature a bimetallic, temperature-sensitive disc for snap-action in opening and closing the switch contacts. The bimetallic disc is thermally and electrically insulated from the electrical circuit, eliminating self-heating effects. Only the temperature of the controlled equipment causes the switch to actuate. Switch operation is rapid and positive due to the characteristics of the bimetallic disc and the wiping action of the current-carrying contacts. Contact chattering is virtually eliminated, as is false cycling and sparking. Exposed disc and single operation models available.

Models available from stock - subject to availability
Fan Controls • SE-F - Close On-Rise (normally open)

Model Number	Temperature Ranges	
	Open ºF	Close ºF
SE-F060	40 ± 9	60 ± 5
SE-F090	70 ± 9	90 ± 5
SE-F110	90 ± 9	110 ± 5
SE-F120	100 ± 9	120 ± 5
SE-F130	110 ± 9	130 ± 5
SE-F140	120 ± 9	140 ± 5
SE-F219H*	180 ± 9	219 ± 5

* Horizontal terminals

SPECIFICATIONS

Electrical ratings	120VAC, 240VAC, 25 Amps, Resistive, 60Hz 120VAC, 10FLA, 60LRA, 60Hz, Inductive 240VAC, 5FLA, 30LRA, 60Hz, Inductive 100,000 Cycles
Temperature range *(UL Approved Models)*	33ºF to 302ºF (1ºC to 150ºC)
Temperature range *(Non-UL Approved Models)*	302ºF to 350ºF (150ºC to 177ºC)
Differential	14ºF to 100ºF (8ºC to 56ºC) - SPST Models 27ºF to 100ºF (15ºC to 56ºC) - SPDT Models
Dielectric strength	1,500VAC/1 minute
Approvals	UL File No. E145478(S), XAPX2 C-UL File No. E145478, XAPX8

Models available from stock - subject to availability
Limit Controls • SE-L - Open On-Rise (normally closed)

Model Number	Temperature Ranges	
	Open ºF	Close ºF
SE-L120	120 ± 7	106 ± 9
SE-L130	130 ± 7	115 ± 9
SE-L135	135 ± 7	110 ± 9
SE-L140	140 ± 7	100 ± 9
SE-L145	145 ± 7	120 ± 9
SE-L150	150 ± 7	110 ± 9
SE-L150-A	150 ± 7	125 ± 9
SE-L150-D	150 ± 7	130 ± 9
SE-L160	160 ± 7	120 ± 9
SE-L165	165 ± 7	125 ± 9
SE-L170	170 ± 7	130 ± 9
SE-L175	175 ± 7	155 ± 9
SE-L180	180 ± 7	150 ± 9
SE-L180A	180 ± 7	140 ± 9
SE-L190	190 ± 7	150 ± 9
SE-L194H*	194 ± 7	180 ± 9
SE-L200	200 ± 7	160 ± 9
SE-L210	210 ± 7	170 ± 9
SE-L230	230 ± 7	190 ± 9
SE-L240	240 ± 7	215 ± 9
SE-L250	250 ± 7	210 ± 9
SE-L255	255 ± 7	230 ± 9
SE-L300	300 ± 7	250 ± 9
SE-L325	325 ± 7	275 ± 9
SE-L350	350 ± 7	310 ± 9

* Horizontal terminals

It is the customer’s sole responsibility to specify and determine the suitability of a particular control or component based on their unique individual applications and requirements

(714) 917-1333 • (800) 257-3526 • FAX (714) 917-1355 • E-mail: sales@selcoproducts.com

3/4” Disc Thermostats - Automatic Reset

SES (T11) Series - Surface Mount

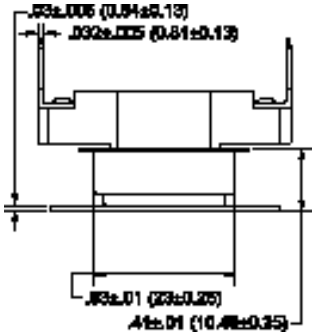

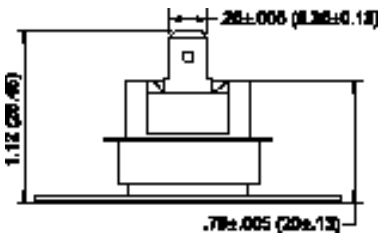

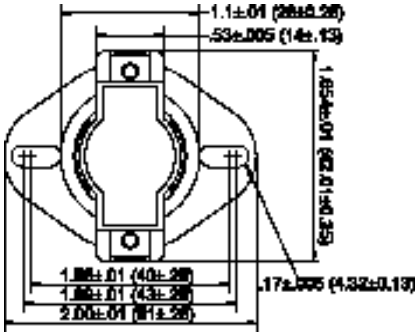

FEATURES

- 25 Amp capacity
- UL and CUL approved
- Factory calibrated to your specifications

APPLICATIONS

- Pumps
- H.V.A.C.
- Automotive
- Medical/Lab Equipment

The T11 model is designed to attach directly to equipment to provide instantaneous temperature measurement and reliable protection. The units feature a bimetallic, temperature sensitive disc for snap-action in opening and closing switch contacts. The bimetallic disc is thermally and electrically insulated from the electrical circuit, eliminating self-heating effects. Only the temperature of the controlled equipment or its adjacent environment causes the switch to actuate.

Switch operation is rapid and positive due to the characteristics of the bimetallic disc and wiping action of the current carrying contacts. Contact chattering is virtually eliminated, as is false cycling and sparking. The thermostats are enclosed in compact, rugged, tamper-proof cases designed for quick and easy installation in the controlled equipment. Exposed disc and single operation models available.

Models available from stock - subject to availability
Fan Controls ● SES-F - Close On-Rise (normally open)

Model Number	Temperature Ranges	
	Open ºF	Close ºF
SES-F058	44 ± 9	58 ± 5
SES-F120H*	100 ± 9	120 ± 5
SES-F130	115 ± 9	130 ± 5
SES-F200H*	160 ± 9	200 ± 5

* Horizontal terminals

SPECIFICATIONS

Electrical ratings	120VAC, 240VAC, 25 Amps, Resistive, 60Hz 120VAC, 10FLA, 60LRA, 60Hz, Inductive 240VAC, 5FLA, 30LRA, 60Hz, Inductive 100,000 Cycles
Temperature range *(UL Approved Models)*	33ºF to 302ºF (1ºC to 150ºC)
Temperature range *(Non-UL Approved Models)*	302ºF to 350ºF (150ºC to 177ºC)
Differential	14ºF to 100ºF (8ºC to 56ºC) - SPST Models 27ºF to 100ºF (15ºC to 56ºC) - SPDT Models
Dielectric strength	1,500VAC/1 minute
Approvals	UL File No. E145478(S), XAPX2 C-UL File No. E145478, XAPX8

Models available from stock - subject to availability
Limit Controls ● SES-L - Open On-Rise (normally closed)

Model Number	Temperature Ranges	
	Open ºF	Close ºF
SES-L110	110 ± 7	96 ± 9
SES-L120	120 ± 7	106 ± 9
SES-L150	150 ± 7	130 ± 9
SES-L180	180 ± 7	150 ± 9
SES-L190	190 ± 7	160 ± 9
SES-L213H*	213 ± 7	155 ± 9
SES-L250	250 ± 7	220 ± 9
SES-L275H*	275 ± 7	245 ± 9

* Horizontal terminals

It is the customer’s sole responsibility to specify and determine the suitability of a particular control or component based on their unique individual applications and requirements

(714) 917-1333 ● (800) 257-3526 ● FAX (714) 917-1355 ● E-mail: sales@selcoproducts.com

3/4” Disc Thermostats - Manual Reset

SE and SES (T10/T11) Series - Airstream and Surface Mount

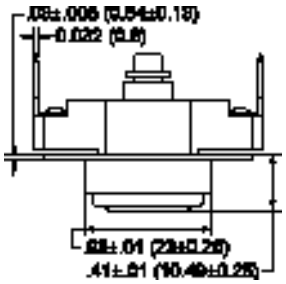

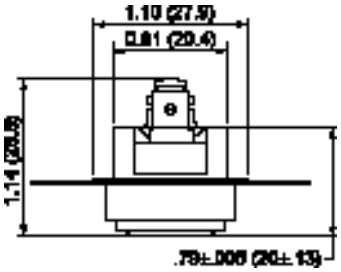

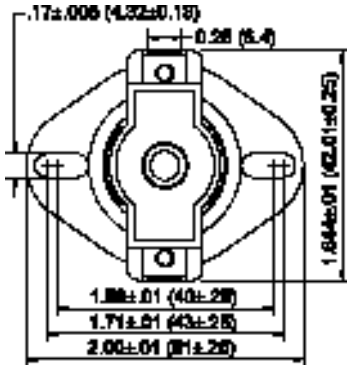

FEATURES

- 25 Amp capacity
- Operation up to 350ºF
- Factory calibrated to your specifications

APPLICATIONS

- H.V.A.C.
- Major appliances
- Vending machines

Selco thermostats are widely used to control or protect high-power home appliances like dryers, dishwashers, home water heaters, and solar heaters. The switch mechanism is actuated by a snap-action bimetal disc, which may be enclosed or exposed.

Made to open on temperature rise, these SPST devices are available in a variety of mounting configurations. Temperature calibrations are preset and typically built to order. These units are not considered as “M2” trip free devices. Consult Selco for additional models available from stock.

Models available from stock - subject to availability
Limit Controls • SES-L - Open On-Rise (normally closed)

Model Number	Temperature Ranges
	Open ºF
SES-L200M*	200 ± 11
SES-L265HM*	265 ± 14

* Mounting Configuration: Surface

SPECIFICATIONS

Electrical ratings	120VAC, 240VAC, 25 Amps, Resistive, 60Hz 120VAC, 10FLA, 60LRA, 60Hz, Inductive 240VAC, 5FLA, 30LRA, 60Hz, Inductive 5,000 Cycles
Temperature range *(UL Approved Models)*	33ºF to 302ºF (1ºC to 150ºC)
Temperature range *(Non-UL Approved Models)*	302ºF to 350ºF (150ºC to 177ºC)
Dielectric strength	1,500VAC/1 minute
Approvals	UL File No. E145478(S), XAPX2 C-UL File No. E145478, XAPX8

Models available from stock - subject to availability
Limit Controls • SE-L - Open On-Rise (normally closed)

Model Number	Temperature Ranges
	Open ºF
SE-L090M*	90 ± 11
SE-L130M*	130 ± 11
SE-L160M*	160 ± 11
SE-L200M*	200 ± 11
SE-L250M*	250 ± 14
SE-L350M*	350 ± 16

* Mounting Configuration: Airstream

It is the customer’s sole responsibility to specify and determine the suitability of a particular control or component based on their unique individual applications and requirements

(714) 917-1333 • (800) 257-3526 • FAX (714) 917-1355 • E-mail: sales@selcoproducts.com

Special Order Terminal Orientations

For SE and SES (T10 and T11) Series

Code 0

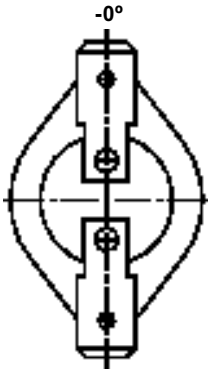

Code 30

Code 45

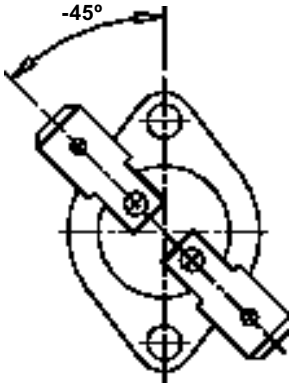

Code 60

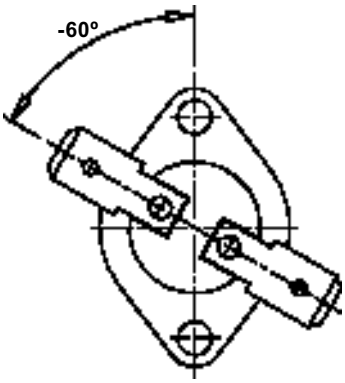

Code 90

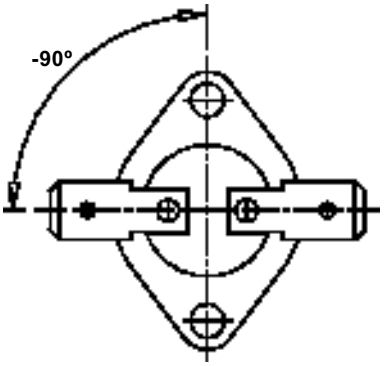

Code 135

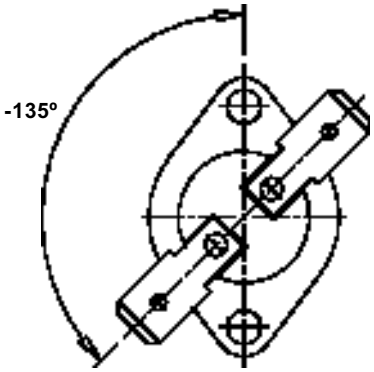

Code 150

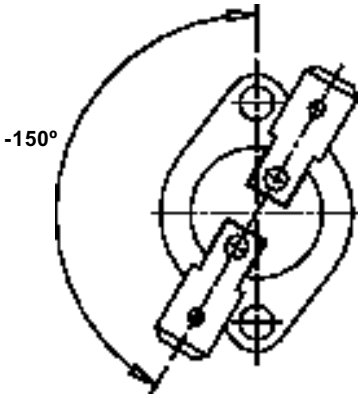

It is the customer's sole responsibility to specify and determine the suitability of a particular control or component based on their unique individual applications and requirements

(714) 917-1333 • (800) 257-3526 • FAX (714) 917-1355 • E-mail: sales@selcoproducts.com

Special Order Map

For SE and SES (T10 and T11) Series

Build Your Own Part

Model	Reset	Electrical Function	Terminal Type	Terminals	Terminal Orientation	Set Point ºF	Differential ºF

Model

T10 SE Series - Airstream Mount - refer to pages 17-19
T11 SES Series - Surface Mount - refer to pages 17-19

Reset

1 Automatic
2 Manual
3 Single operation

Electrical Function

1 Open on-rise (normally closed) (S.P.S.T.)
2 Close on-rise (normally open) (S.P.S.T.)
3 Single pole - double throw  (S.P.D.T.)

Terminal Type

3 .250 quick connects - Faston (6.3mm - male)
4 M4 (4mm screw)
5 S.P.D.T.:
.250 quick connects - Faston 6.3mm - male
.250 quick connects - Faston 6.3mm - female
.187 quick connects - Faston 4.8mm - male

Terminals

1 Horizontal
3 Vertical

Terminal Orientation (from mount holes) - refer to page 20

Code 0 0º
Code 30 30º
Code 45 45º
Code 60 60º
Code 90 90º
Code 135 135º
Code 150 150º

Set Point (specify in ºF)

Differential (specify in ºF)

Example Part Number

T10	1	1	3	3	90º	170º	30º
Model	Reset	Electrical Function	Terminal Type	Terminals	Terminal Orientation	Set Point ºF	Differential ºF

It is the customer's sole responsibility to specify and determine the suitability of a particular control or component based on their unique individual applications and requirements

(714) 917-1333 • (800) 257-3526 • FAX (714) 917-1355 • E-mail: sales@selcoproducts.com

Encapsulated Thermostats

SEO (T) Series

FEATURES

- 10 and 25 amp loads
- Dust and moisture proof
- Wide range of operating temperatures

APPLICATIONS

- Freezers
- Refrigerators
- Air conditioners

The SEO (T) Series automatic reset thermostat was designed for humid environments. A resin filled thermoplastic cap covers the thermostat. The fixed factory calibrated bimetal disc is located adjacent to the surface to be monitored. This will provide a rapid response to temperature changes. Each device is built to open or close on rise at any desired set point.

Lead wires are normally 6” in length. Custom lead lengths are available. The T16 an T17 models are available with #18 gauge wire. Models T21 and T22 are available with #14 gauge wire. Numerous types of terminals can be furnished at an extra cost.

For use in millivolt applications, the T Series carries a 12Vdc, 250mA rating.

SPECIFICATIONS

Temperature range	-4ºF to 212ºF (-20ºC to 100ºC)
Differential (minimum)	20ºF (11ºC), S.P.S.T. Temp range: -4ºF to 32ºF (-20ºC to 0ºC) 14ºF (8ºC), S.P.S.T. Temp range: 32ºF to 212ºF (0ºC to 100ºC) 27ºF (15ºC) minimum, S.P.D.T.
Environmental temperature	-4ºF to 212ºF (-20ºC to 100ºC)
Electrical ratings	
T16 and T17 Models	120VAC, 10 Amps, Resistive, S.P.S.T. 120VAC, 5.8 Amps, Inductive, S.P.S.T. 250VAC, 5 Amps, Resistive, S.P.S.T. 250VAC, 2.9 Amps, Inductive, S.P.S.T. 100,000 Cycles
T21 and T22 Models	220VAC, 25 Amps, S.P.S.T. or S.P.D.T. 100,000 Cycles
T60 Model	120/250VAC, 16 Amps, S.P.S.T.
Dielectric strength	
T16 and T17 Models	1500VAC/1 minute
T21 and T22 Models	1480VAC/1 minute
Approvals	UL File No. E145478, XAPX2 C-UL File No. E145478, XAPX8 VDE

T16 Model - Without Bracket
Stainless steel cover

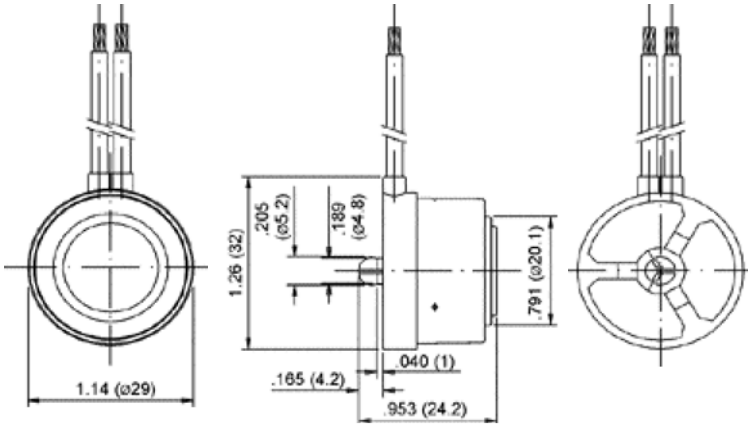

T17 Model - Auxiliary Clip Mount
Stainless steel cover - 3/8” Clip - complete clips available

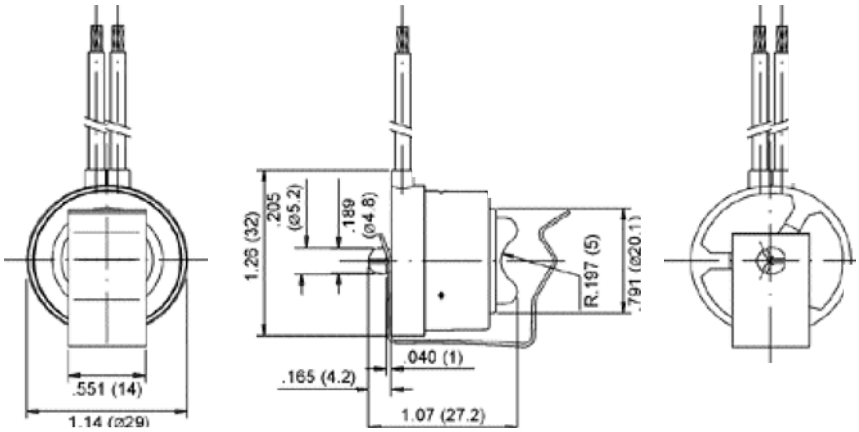

It is the customer’s sole responsibility to specify and determine the suitability of a particular control or component based on their unique individual applications and requirements

(714) 917-1333 • (800) 257-3526 • FAX (714) 917-1355 • E-mail: sales@selcoproducts.com

T21 Model - With Bracket
Stainless steel cover

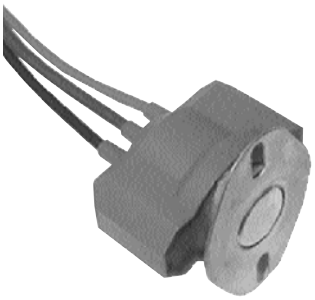

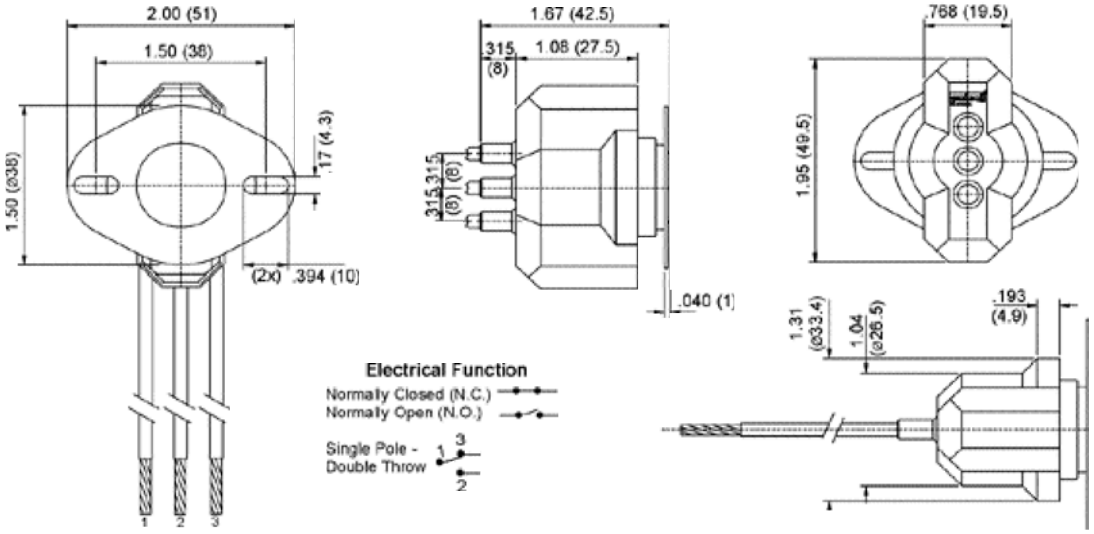

T22 Model - Auxiliary Clip Mount
Stainless steel cover - 3/8" and 1/2" clips

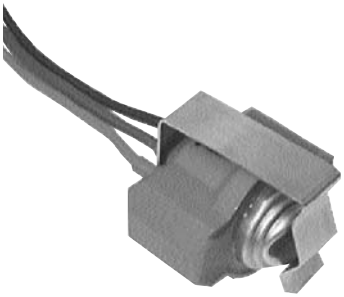

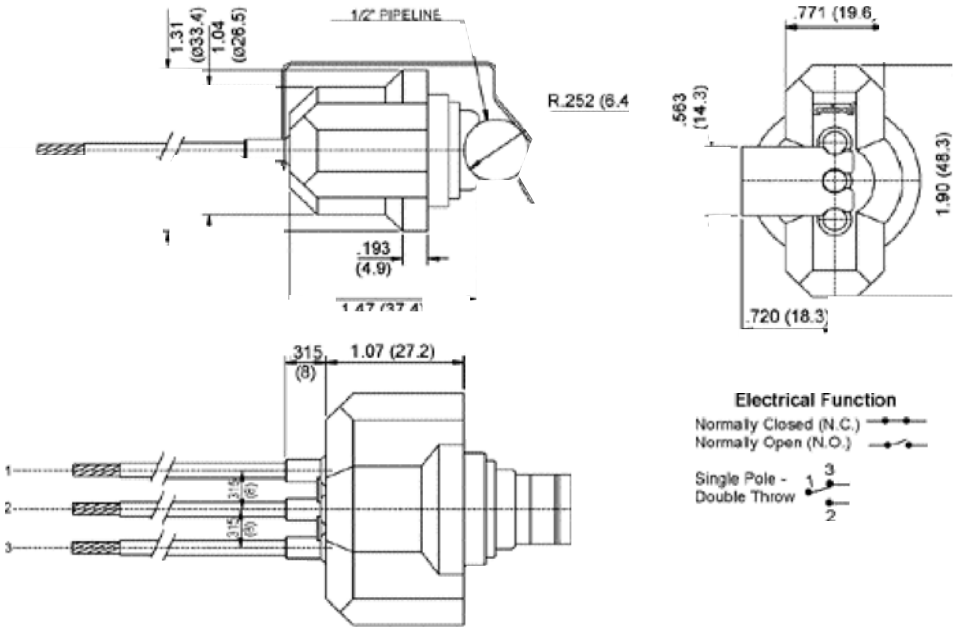

T60 Model - Plastic Body

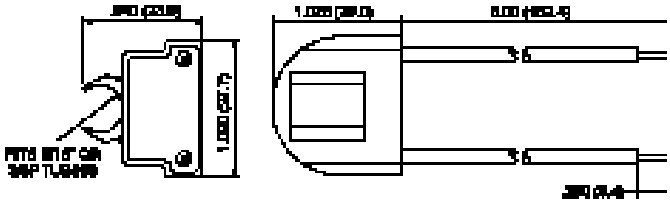

It is the customer's sole responsibility to specify and determine the suitability of a particular control or component based on their unique individual applications and requirements

(714) 917-1333 • (800) 257-3526 • FAX (714) 917-1355 • E-mail: sales@selcoproducts.com

Encapsulated Thermostats

Special Order Map for SEO (T) Series

Build Your Own Part

Model	Electrical Function	Set Point (ºF)	Differential (ºF)	Lead Lengths (inches)	Pipe Size	Clip

Model

T16	Without bracket - stainless steel cover (refer to page 22)
T17	Auxiliary clip mount - stainless steel cover - 3/8” clip (refer to page 22)
T21	With bracket - stainless steel cover (refer to page 23)
T22	Auxiliary clip mount - stainless steel cover - 3/8” and 1/2” clips (refer to page 23)
T60	Plastic body (refer to page 23)

Electrical Function

1	S.P.S.T. - Open on-rise (normally closed)
2	S.P.S.T. - Close on-rise (normally open)
3	S.P.D.T. (T21 and T22 models only)

Set Point (specify in ºF)

Differential (specify in ºF)

Lead Length (specify in inches) - standard lead length: 6”

Pipe Size

1	3/8”	(T17, T22 and T60 models only)
2	1/2”	(T22 model only)
3	5/16”	(T60 model only)

Example Part Number

T17	1	60	20	12	1
Model	Electrical Function	Set Point (ºF)	Differential (ºF)	Lead Lengths (inches)	Pipe Size

It is the customer’s sole responsibility to specify and determine the suitability of a particular control or component based on their unique individual applications and requirements

(714) 917-1333 • (800) 257-3526 • FAX (714) 917-1355 • E-mail: sales@selcoproducts.com

Thermal Protector

OP6 Series (Close On-Rise) and UP6 Series (Open On-Rise)

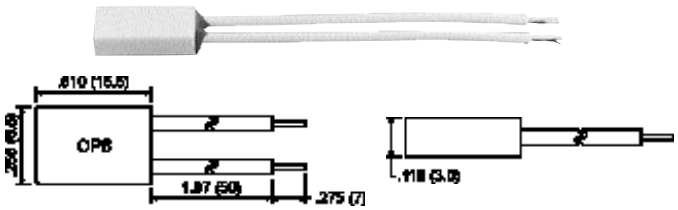

FEATURES

- Low cost
- PBT enclosure
- Snap-action bimetal technology

APPLICATIONS

- Transformers
- Motor protection
- Timer applications
- Alarm signal controller

The OP6 Series (OP6, OP61, OP62) thermal protectors close an electrical circuit. They are a snap-action device with quick make/quick break, fast sensing and switching action. These self-resetting devices feature a reinforced PBT-enclosure which make additional sleeving unnecessary. Various leads and terminations are available.

SPECIFICATIONS

Variations	
OP6	Without lead wires, 2 welding terminals
OP61	Uninsulated solid wires, bare
OP62	Stranded insulated wires, tin-coated - 24AWG Standard lead length: 50mm + 7mm
Temperature range	131ºF to 284ºF (55ºC to 140ºC)
Temperature tolerance	±9ºF, ±12ºF, ±18ºF (±5ºC, ±7ºC, ±10ºC)
Standard differential	50ºF±25ºF (30ºC±15ºC)
Electrical ratings	125VAC, 4 Amps, Resistive, 10,000 Cycles 250VAC, 2.5 Amps, Resistive, 10,000 Cycles
Contact resistance	50m Ω or less (initial value)
Approvals & contact ratings	
UL873 *OP6, OP61 and OP62 Models*	Regulating 125VAC, 4 Amps, Resistive, 6,000 Cycles 284ºF maximum (140ºC maximum) File No. E50124
CSA *OP6, OP61 and OP62 Models*	Std. C22.2, No. 24 - Regulating (c-UL) 125VAC, 4 Amps, Resistive, 6,000 Cycles 284ºF maximum (140ºC maximum) File No. E50124)
EN60730-2-2 *OP6, OP61 and OP62 Models*	Thermal Motor Protector 250VAC, 284ºF maximum (140ºC maximum) File No. 8921.00-4510-0026
EN60730-2-9 *OP6, OP61 and OP62 Models*	Thermal Cut-Out 250VAC, 2.5 Amps, Resistive, 10,000 Cycles 250VAC, 1.6 Amps, Inductive, 10,000 Cycles 284ºF maximum (140ºC maximum) File No. 8921.00-4510-0027
EN60730-2-9 *OP61G and OP62G Models*	Thermal Cut-Out 250VAC, 0.5 Amps, Resistive, 10,000 Cycles 284ºF maximum (140ºC maximum) File No. 8921.00-4510-0027 RoHS Compliant
Contact system	
OP6, OP61, and OP62 Models	Close on-rise (normally open) Silver contacts
OP6#G	Close on-rise (normally open) PGS (Platinum/Gold/Silver alloy) cross-bar contacts for micro electric load of electronic applications

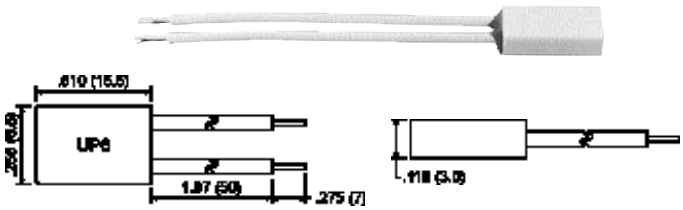

FEATURES

- PBT enclosure
- Not current sensitive
- Suitable for PCB mounting

APPLICATIONS

- Solenoids
- Motor protection
- Lighting ballasts

The UP6 Series (UP6, UP61 and UP62) PBT enclosed thermal protectors, the smallest thermal protector available, features an excellent performance in thermal response due to the compact miniature design and unique engineering techniques of bimetal disc mounting.

SPECIFICATIONS

Variations	
UP6	Without lead wires
UP61	Uninsulated solid wires
UP62	Stranded insulated wires - 24AWG Standard lead length: 50mm + 7mm
Temperature range	131ºF to 284ºF (55ºC to 140ºC)
Temperature tolerance	±9ºF, ±12ºF, ±18ºF (±5ºC, ±7ºC, ±10ºC)
Standard differential	50ºF±25ºF (30ºC±15ºC)
Electrical ratings	125VAC, 4 Amps, Resistive, 10,000 Cycles 250VAC, 2.5 Amps, Resistive, 10,000 Cycles
Contact resistance	50m Ω or less (initial value)
Approvals & contact ratings	
UL873 *UP6, UP61 and UP62 Models*	Regulating 125VAC, 4 Amps, Resistive, 6,000 Cycles 284ºF maximum (140ºC maximum) File No. E50124
CSA *UP6, UP61 and UP62 Models*	C22.2, No. 24 (c-UL) - Regulating 125VAC, 4 Amps, Resistive, 6,000 Cycles 284ºF maximum (140ºC maximum) File No. E50124
EN60730-2-2 *UP6, UP61 and UP62 Models*	Thermal Motor Protector 250VAC, 284ºF maximum (140ºC maximum) File No. 8921.00-4510-0026
EN60730-2-9 *UP6, UP61 and UP62 Models*	Thermal Cut-Out 250VAC, 2.5 Amps, Resistive, 10,000 Cycles 250VAC, 1.6 Amps, Inductive, 10,000 Cycles 284ºF maximum (140ºC maximum)
EN60730-2-9 *UP61G and UP62G Models*	Thermal Cut-Out 250VAC, 0.5 Amps, Resistive, 10,000 Cycles 284ºF maximum (140ºC maximum) File No. 8921.00-4510-0027 RoHS Compliant
Contact system	
UP6, UP61, and UP62 Models	Open on-rise (normally closed) Silver contacts
UP6#G Models	Open on-rise (normally closed) PGS (Platinum/Gold/Silver alloy) cross-bar contacts for micro power applications

It is the customer's sole responsibility to specify and determine the suitability of a particular control or component based on their unique individual applications and requirements

(714) 917-1333 • (800) 257-3526 • FAX (714) 917-1355 • E-mail: sales@selcoproducts.com

Thermal Protector

UP7 Series (Open On-Rise) and UI2 Series (Open On-Rise)

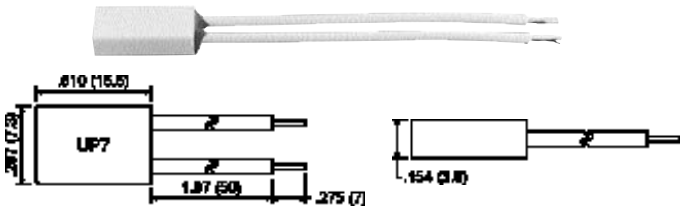

FEATURES

- Low cost
- Durable plastic case
- Smallest motor protector approved by UL

APPLICATIONS

- Solenoids
- Small motors
- Transformers
- Electronic appliances

The UP7 Series (UP7, UP71, UP72) PBT enclosed thermal protectors are compact 1/2HP (373W) motor protectors. The unique engineering techniques of holding the bimetal disc result in excellent performance in heat response.

SPECIFICATIONS

Variations	
UP7	Without lead wires, 2 welding terminals
UP71	Uninsulated solid wires, bare
UP72	Stranded insulated wires, tin-coated - 22AWG Standard lead length: 50mm + 7mm
Temperature range	131ºF to 302ºF (55ºC to 150ºC)
Temperature tolerance	±9ºF, ±12ºF, ±18ºF (±5ºC, ±7ºC, ±10ºC)
Standard differential	50ºF±25ºF (30ºC±15ºC)
Electrical ratings	125VAC, 4 Amps, Resistive, 10,000 Cycles 250VAC, 2.5 Amps, Resistive, 10,000 Cycles
Contact resistance	50m Ω or less (initial value)
Approvals & contact ratings	
EN60730-2-2 *UP7 Model*	Thermal Motor Protector 250VAC, 302ºF maximum (150ºC maximum) File No. 8921.00-4510-0026
EN60730-2-9 *UP7 Model*	Thermal Cut-Out 250VAC, 2.5 Amps, Resistive, 10,000 Cycles 250VAC, 1.6 Amps, Inductive, 10,000 Cycles 302ºF maximum (150ºC maximum) File No. 8921.00-4510-0027
UL2111 *UP71 and UP72 Models*	Motor Protector 125V/250VAC, 1/2HP maximum 302ºF maximum (150ºC maximum) File No. E52703
CSA *UP71 and UP72 Models*	Std. C22.2, No. 77 - Motor Protector 125V/250VAC, 1/2HP maximum 302ºF maximum (150ºC maximum) File No. E52073
	Std. C22.2, No. 77 - Motor Protector 125V/250VAC, 3.75FLA File No. LR35080
EN60730-2-2 *UP71 and UP72 Models*	Thermal Motor Protector 250VAC, 302ºF maximum (150ºC maximum) File No. 8921.00-4510-0026
EN60730-2-9 *UP71 and UP72 Models*	Thermal Cut-Out 250VAC, 2.5 Amps, Resistive, 10,000 Cycles 250VAC, 1.6 Amps, Inductive, 10,000 Cycles 302ºF maximum (150ºC maximum) File No. 8921.00-4510-0027
	RoHS Compliant
Contact system	
UP7, UP71, and UP72 Models	Open on-rise (normally closed) Silver contacts

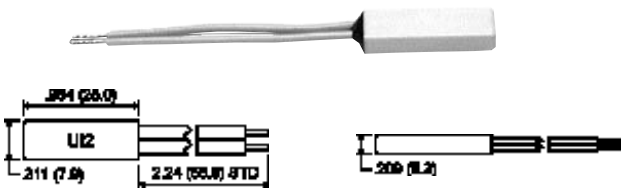

FEATURES

- PBT enclosure
- Designed for high rated motors
- Snap-action bimetal technology

APPLICATIONS

- Power supplies
- Motor protection
- Electronic appliances

The PBT enclosed UI2 Series offers both thermal conductivity and electrical insulation with no need for additional insulation sleeves. With its large current carrying capacity, the UI2 Series is ideal for more demanding applications and solutions.

SPECIFICATIONS

Variation	
UI2	Stranded insulated wires - 20AWG
Temperature range	131ºF to 302ºF (55ºC to 150ºC)
Temperature tolerance	±9ºF, ±12ºF, ±18ºF (±5ºC, ±7ºC, ±10ºC)
Standard differential	50ºF±25ºF (30ºC±15ºC)
Electrical ratings	125VAC, 10 Amps, Resistive, 6,000 Cycles 250VAC, 10 Amps, Resistive, 10,000 Cycles
Contact resistance	50m Ω or less (initial value)
Approvals & contact ratings	
CMJ	Registration No. J-22 125VAC, 8 Amps, Resistive, 10,000 Cycles 266ºF maximum (130ºC maximum)
UL2111	Motor Protector 125VAC, 1/2HP maximum 302ºF maximum (150ºC maximum) File No. E52703
UL873	Limiting 125VAC, 6 Amps, Resistive, 100,000 Cycles 284ºF maximum (140ºC maximum) File No. E50124
	Regulating 125VAC, 12 Amps, Resistive, 6,000 Cycles 284ºF maximum (140ºC maximum) File No. E50124
CSA	Std. C22.2, No. 77 - Motor Protector 125VAC, 293ºF maximum (145ºC maximum) File No. LR35080
	Std. C22.2, No. 24 - Regulating 125VAC, 6 Amps, Resistive, 100,000 Cycles 293ºF maximum (145ºC maximum) File No. LR35080
EN60730-2-2	Thermal Motor Protector 250VAC, 311ºF maximum (155ºC maximum) File No. 8921.00-4510-7028
E60730-2-9	Thermal Cut-Out 250VAC, 10 Amps, Resistive, 1,000 Cycles 250VAC, 8 Amps, Inductive, 1,000 Cycles 250VAC, 10 Amps, Resistive, 10,000 Cycles From 131ºF to 311ºF (55ºC to 155ºC) File No. 8921.00-4510-7029
	RoHS Compliant
Contact system	
UI2	Open on-rise (normally closed)

It is the customer's sole responsibility to specify and determine the suitability of a particular control or component based on their unique individual applications and requirements

(714) 917-1333 • (800) 257-3526 • FAX (714) 917-1355 • E-mail: sales@selcoproducts.com

Thermal Protectors - Self Hold

UB8P and UB81P Series

UB8P Model

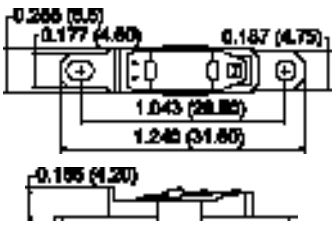

FEATURES

- Phenol resin base
- Built-in PTC heater for self-hold
- Quick thermal response due to exposure of the bimetallic element

APPLICATIONS

- Mixers
- Blenders
- Grinders
- Dishwashers
- Space heaters

Models UB8P (exposed model - shown above) and UB81P (enclosed model) Self-Hold Thermal Cut-Out and Thermal Protectors are designed to provide overheat protection in high voltage applications. With a high 16 Amp capability, the new models are well suited for thermal overload protection in a broad range of applications.

The body of these surface mount devices are manufactured of phenolic resin and feature a new patent pending partition wall design that isolates the switch from the main body. This design effectively controls arcing that can cause a break in voltage contact (particularly in 250V applications), ensuring continuous operation to setpoint. The UB81P features a reinforced PBT enclosure for dust-proof applications; the UB8P has an exposed bi-metallic element for high accuracy and fast response to ambient air temperature.

Both models incorporate a “self-hold” non-self resetting function that provides a high level of operational safety, especially in appliances with moving parts. The “self-hold” function ensures that after the element reaches its pre-set open temperature, the internal heater activates to maintain a self-regulating temperature, preventing the switch from resetting until the user disconnects the power.

SPECIFICATIONS

Temperature range *(UL Approved models)*	167ºF to 257ºF (75ºC to 125ºC)
Environmental temperature	±9ºF, ±12ºF, ±18ºF (±5ºC, ±7ºC, ±10ºC)
Differential	50ºF±25ºF (30ºC±15ºC)
Electrical ratings	125VAC, 16 Amps, Resistive, 6,000 Cycles
Contact resistance	50m Ω or less (initial value)
Approvals & contact ratings	
UL-873	Regulating (manual reset) 125VAC, 16 Amps, Resistive, 6,000 Cycles 257ºF Maximum (125ºC Maximum) File No. E50124
EN60730-2-9	Temperature Limiter 250VAC, 10 Amps, Resistive, 6,000 Cycles 250VAC, 5 Amps, Inductive, 6,000 Cycles 257ºF Maximum (125ºC Maximum) File No. 8921.00-4521-0039
	RoHS Compliant

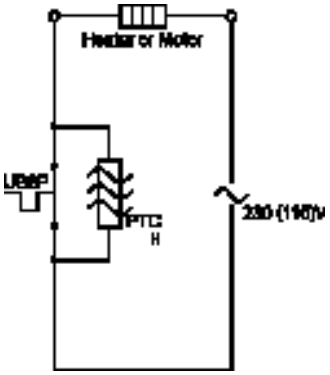

It is the customer’s sole responsibility to specify and determine the suitability of a particular control or component based on their unique individual applications and requirements

(714) 917-1333 • (800) 257-3526 • FAX (714) 917-1355 • E-mail: sales@selcoproducts.com

Thermal Protectors

S7AM Series (Open On-Rise)

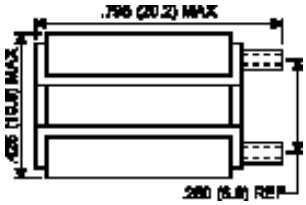

Type A (radial)

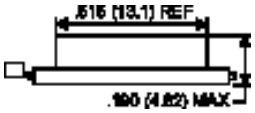

Type A (side view)

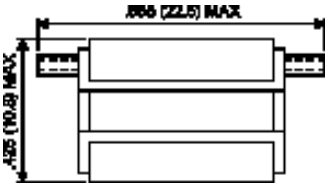

Type B (axial)

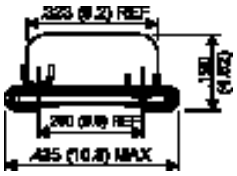

Type A (end view)

The S7AM Thermal Protector is a thermally operated snap-action device which delivers the maximum protection in the smallest package. The operating principle of the S7AM is both simple and effective. At the heart of the protector is a bimetal snap-action disc. When the temperature of this disc reaches its calibrated temperature it snaps open, resulting in an open circuit. This temperature is reached by either an increase in ambient temperature, an increase in current flowing through the disc, or a combination of both. After the S7AM breaks the circuit, the system cools and the S7AM automatically resets allowing power to be restored to the circuit.

Each S7AM rating has a bimetal disc designed and manufactured for that specific temperature rating. Each individual device is then calibrated and checked for opening temperature. This results in precise operating characteristics necessary to achieve consistent, reliable performance over the required life cycle.

Ultimate Trip Current vs. Delta Temperature

Approximation, to be used only for selecting samples for verification tests.

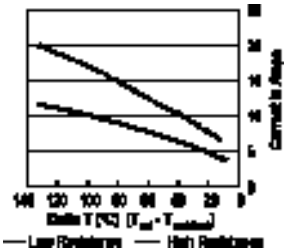

Note: Delta T is the difference between the zero current calibrated opening temperature (T_{cal}) and ambient temperature ($T_{ambient}$) at the protector location.

Average First Cycle Tripping Time vs. Current (25ºC Ambient)

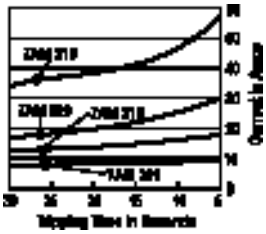

FEATURES

- Miniature size
- Gasket steel case
- Individually temperature tested and calibrated
- Wide selection of leads and insulating sleeves
- Positive make and break with snap-action disc
- Repeatable temperature performance over life

APPLICATIONS

- HID ballasts
- Transformers
- Battery packs
- Lighting ballasts
- Vacuum cleaners
- Split capacitor motors
- Automotive accessory, solenoids, PC boards and other applications

SPECIFICATIONS

Electrical ratings	16VDC, 20 Amps, 10,000 Cycles 120VAC, 22 Amps, 10,000 Cycles 277VAC, 8 Amps, 10,000 Cycles 600VAC, 4 Amps, 10,000 Cycles
Dielectric strength	900 Volts
Approvals	***UL File Numbers found under Texas Instr. 7AM***
UL2111	Motor Protection - File E15962
UL873	Limit and Regulating Controls - File E34618
CSA	Std. C22.2, No. 77 - Motor Protection File No. 11372
	Std. C22.2, No. 74 Limit and Regulating Controls - File No. 24458
KEMA (ENEC) EN60730-2-2	Motor Protection - File No. 2014531.03
KEMA (ENEC) EN60730-2-3	Ballast Protection - File No. 2014531.03
KEMA (ENEC) EN60730-2-9	Thermal Cut-Out - File No. 2014531.03

PART NUMBER SYSTEM

S7AM XXX X X - XXX - X

Standard Opening Temperature		
Opening Temp ºC	* Low Resistance Bimetal Disc	** High Resistance Bimetal Disc
	Code	
65	020	●
70	021	201
75	022	202
80	023	203
85	024	204
90	025	205
95	026	206
100	027	207
105	028	208
110	029	209
115	030	210
120	031	211
125	032	212
130	033	213
135	034	214
140	035	215
145	036	216
150	037	217
155	038	218
160	039	219
165	040	●
170	336	●
175	316	●

Terminal Configuration	
Code	Terminals
A	Same end
B	Opposite end

Temperature Tolerance	
Code	Tolerance
5	±5ºC

Physical Characteristics
i.e. Wire leads, insulating sleeves

Non-Standard Gasket Material (Option)	
Code	Gasket Type/Color
5	High Seal / White

* Low Resistance - In applications where temperature rise is less than 2ºC per second

** High Resistance - In applications where temperature rise is 2ºC - 5ºC per second

It is the customer's sole responsibility to specify and determine the suitability of a particular control or component based on their unique individual applications and requirements

(714) 917-1333 • (800) 257-3526 • FAX (714) 917-1355 • E-mail: sales@selcoproducts.com

Printed Circuit Board Thermostats

802 Series

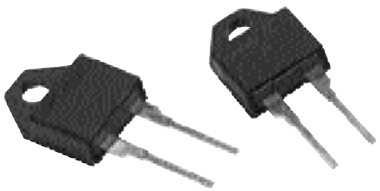

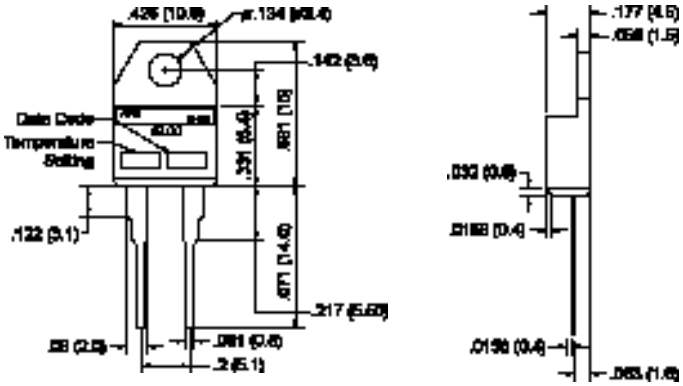

FEATURES

- Conforms to Y220/TO220 package
- Gold cross-bar contact applicable to micro current

APPLICATIONS

- Computers
- Test equipment
- Power supplies

The Selco 802 Series is a miniature bimetal thermostat. This PCB unit conforms to the international Y220/TO220 package. The SPST snap-action contact is available normally open or normally closed at a factory set point range of 104ºF to 284ºF.

SPECIFICATIONS

Electrical ratings	48VDC, 1 Amp, Resistive, 30,000 Cycles 120VAC, 1 Amp, Resistive, 30,000 Cycles 5VDC, 20mA, Resistive, 100,000 Cycles
Temperature range	One fixed set point 104ºF to 2480ºF (40ºC to 120ºC)
Differential	27ºF (15ºC)
Environmental temperature	284ºF (140ºC)
Dielectric strength	1,500VAC/1 minute 1,500VAC/1 minute between terminals and cover
Circuit resistance	50m Ω or less
Insulation resistance	100M Ω or more (with a 500VDC megger)
Materials	
Body housing	PBT (Polybutylene Terephtalate) UL-94 VO
Terminals	Tin plated brass
Contacts	Gold plated silver
Approvals	Temperature indicating and regulating UL873, CUL (CSA), CE UL File No. E145478(S), XAPX2 C-UL File No. E145478(S), XAPX8 VDE File No. E-14713 RoHS Compliant

Models available from stock - subject to availability
802-F - Close On-Rise (normally open)

Model Number	Temperature Ranges			
	Closing		Reset	
	±9ºF	±5ºC	±12ºF	±7ºC
802F-040	104	40	77	25
802F-045	113	45	86	30
802F-050	122	50	95	35
802F-055	131	55	104	40
805F-060	140	60	113	45
805F-065	149	65	122	50
802F-070	158	70	131	55
802F-075	167	75	140	60
802F-080	176	80	149	65
802F-085	185	85	158	70
802F-090	194	90	167	75
802F-095	203	95	176	80
802F-100	212	100	185	85
802F-105	221	105	194	90
802F-110	230	110	203	95
802F-115	239	115	212	100
802F-120	248	120	221	105

Models available from stock - subject to availability
802-L - Open On-Rise (normally closed)

Model Number	Temperature Ranges			
	Opening		Reset	
	±9ºF	±5ºC	±12ºF	±7ºC
802L-040	104	40	77	25
802L-045	113	45	86	30
802L-050	122	50	95	35
802L-055	131	55	104	40
805L-060	140	60	113	45
805L-065	149	65	122	50
802L-070	158	70	131	55
802L-075	167	75	140	60
802L-080	176	80	149	65
802L-085	185	85	158	70
802L-090	194	90	167	75
802L-095	203	95	176	80
802L-100	212	100	185	85
802L-105	221	105	194	90
802L-110	230	110	203	95
802L-115	239	115	212	100
802L-120	248	120	221	105

It is the customer's sole responsibility to specify and determine the suitability of a particular control or component based on their unique individual applications and requirements

(714) 917-1333 • (800) 257-3526 • FAX (714) 917-1355 • E-mail: sales@selcoproducts.com

One Shot Thermal Cutoffs

STC Series

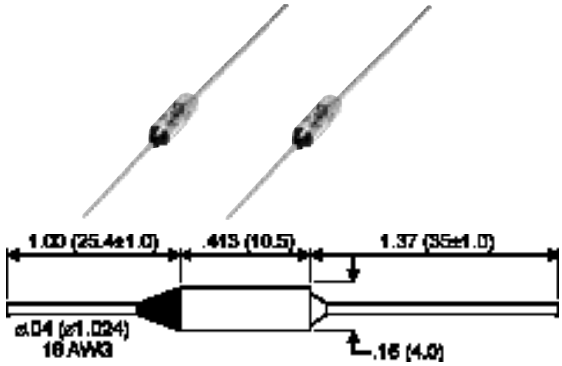

* Some stock models have an overall length of 3.15"
** Special lead lengths are available

Models available from stock - subject to availability

Model Number	Functioning Temperature (T_F)		Holding Temperature (T_H)		Maximum Temperature (T_M)		UL/ cUL	VDE
	ºC	ºF	ºC	ºF	ºC	ºF		
STC-162	72	162	50	122	115	239	●	●
STC-170-LL	77	171	55	131	120	248	●	●
STC-183	84	183	60	140	125	257	●	●
STC-196	91	196	67	153	135	275	●	●
STC-208	98	208	76	169	140	284	●	●
STC-219	104	219	80	176	150	302	●	●
STC-230	110	230	88	190	140	284	●	●
STC-250	121	250	95	203	170	338		
STC-262	128	262	106	223	155	311	●	●
STC-286	141	286	117	243	171	340	●	●
STC-291	144	291	120	248	250	482	●	●
STC-306	152	306	128	262	176	349	●	●
STC-333	167	333	142	288	210	410	●	
STC-338	170	338	146	295	300	572	●	●
STC-363	184	363	160	320	300	572	●	●
STC-378	192	378	162	324	290	554	●	●
STC-421	216	421	191	376	241	466		●
STC-464	240	464	200	392	290	554	●	●

T_F - Functioning Temperature: Temperature at which the thermal cutoff will open +0ºF, -9ºF (+0ºC, -5ºC)

T_H - Hold Temperature: The maximum continuous exposure temperature

T_M - Maximum Temperature: The maximum temperature the thermal cutoff can withstand without changing state

Temperature/Current Correlation Curve

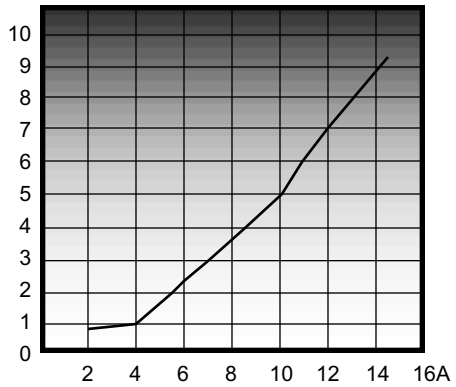

FEATURES
- Low cost
- Excellent contact rating
- Quick and easy installation

APPLICATIONS
- Motors
- Appliances
- Personal care

Thermal cutoffs are designed to provide upper limit temperature protection for many electronic products. Under normal operating temperature, the solid pellet compresses a spring which holds the star contact against the isolated lead. When a fault temperature is reached, the pellet melts and the circuit is opened permanently.

It is important to allow sufficient time to determine the proper and best location for a thermal cutoff. The location will affect the cutoff's ability to protect your product. Placing in the highest temperature area is usually best.

SPECIFICATIONS

Electrical ratings	120/250VAC, 10 Amps, Continuous Duty 120/250VAC, 15 Amps, Interrupting Current
Temperature tolerance	+0ºC/-5ºC
Approvals	UL, CSA, VDE, RoHS Compliant

Determining The Proper Series

- **T_P** The highest temperature of the product to which a cutoff is to be attached
- **TH** The safe temperature range for use of the cutoff
- **T_S** $T_F - T_H = T_S$
  Where TF = the functioning temperature (24ºC less than or equal to TS less than or equal to 40ºC)
- **T_D** The heating temperature caused by electrical load
- **+a**
  1. Self heating of lead wire
  2. Structure of ventilation or air tightness
  3. Location of connecting terminal
  4. Thickness of insulated covering material
  5. Best condition value, electric voltage changes considered

TP + TS + TD + a = Applicable Temperature

Installation Instructions

The performance of the thermal cutoff requires proper handling during installation for it to operate in its intended manner. These instructions are intended to be used to reduce the risk of malfunction of the thermal cutoff which may result from improper installation during forming of leads, splicing, welding and soldering.

1. Bending Leads
Care should be taken when forming the Thermal Cutoff (TCO) leads. The TCO leads must be supported 1/8" from bend and case; and 1/8" from bend and epoxy. This will prevent the epoxy seal from cracking which may result in premature degradation of the pellet. A close visual inspection should be performed to make sure that the TCO leads have not been cut, nicked, folded sharply, fractured or burned.

2. Mechanical Forces During Appliance Connection
a. When installing the TCO, avoid unnecessary bending, twisting, pulling or pushing on the TCO leads. Care should be taken to avoid cracking or chipping of the epoxy, which may result from sharp twisting, or bending of the lead.

b. The TCO body must maintain its cylindrical shape to function properly. Excessive clamping could cause denting or crushing of the TCO body, which may lead to failure. X-ray and visual inspection of the TCO will determine if the fuse body has been damaged.

c. Note that the TCO body is electrically live and must be insulated before applying a metal clamp over the TCO body.

d. Care should be used when pushing the epoxy end lead to avoid the lead being forced into the TCO body. This could result in a failure.

It is the customer's sole responsibility to specify and determine the suitability of a particular control or component based on their unique individual applications and requirements

(714) 917-1333 • (800) 257-3526 • FAX (714) 917-1355 • E-mail: sales@selcoproducts.com

Probe Thermostats

BPO/BPC,CPO/CPC and SIC/SIO Series

SIC/SIO Series

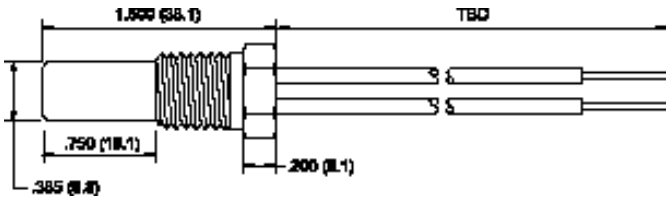

SIC/SIO Series - SPECIFICATIONS

Electrical ratings	120VAC, 6 Amps, Resistive, 100,000 Cycles 240VAC, 4 Amps, Resistive, 100,000 Cycles 120VAC, 5 Amps, Inductive, 100,000 Cycles
Temperature range	41ºF to 400ºF (5ºC to 204ºC)
Differential	None Creep action
Tolerance	±9ºF (±5ºC)
Pressure rating	500PSI
Materials	
Body & tube	Brass or stainless steel - 1/4" NPT
Headfill	Epoxy filled
Contacts	Silver or gold
Wire	18AWG, UL3173, Black 18AWG, UL1015, Black Other lead options available

BPO/BPC Series

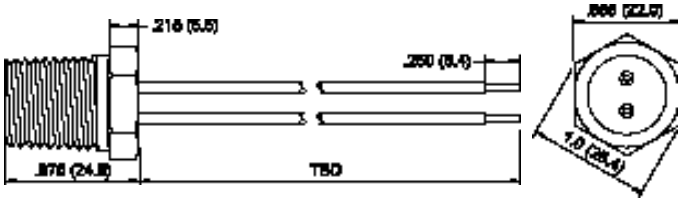

BPO/BPC Series - SPECIFICATIONS

Electrical ratings (Silver contacts)	125VAC, 15 Amps, Resistive, 100,000 Cycles 250VAC, 10 Amps, Resistive, 100,000 Cycles
(Gold contacts)	120VAC, 125VA (Pilot duty), 100,000 Cycles 30VDC, 1 Amp, Resistive, 100,000 Cycles
Inductive load ratings	120VAC, 5.8FLA, 34.8LRA, 6,000 Cycles 240VAC, 2.9FLA, 17.4LRA, 6,000 Cycles
Temperature range	50ºF to 320ºF (10ºC to 160ºC)
Differential	15ºF to 100ºF (8ºC to 56ºC)
Environmental temperature	32ºF to 350ºF (0ºC to 177ºC)
Insulation resistance	100M Ω or more (with a 500VDC megger)
Circuit resistance	50m Ω or less (initial value)
Dielectric strength	1500VAC/1 minute
Pressure rating	500PSI
Materials	
Body & tube	Brass or stainless steel - 1/2" NPT
Headfill	Epoxy filled
Contacts	Silver or gold
Wire	18AWG, UL3173, Black 18AWG, UL1015, Black Other lead options available

APPLICATIONS

- HVAC
- Refrigeration
- Hydraulic systems
- Heaters
- Cooking equipment
- Diesel/Automotive engines
- Motors

Selco probe thermostats are thermally sensitive bimetallic switches which when reaching a fixed factory set temperature, either opens or closes to break or make an electrical circuit. They reset automatically on cooling. Some devices can be used as controlling thermostats which cycle open and close more rapidly to maintain temperature level. Other devices can be used as over temperature protectors to limit a temperature from exceeding a predetermined value (safety device). The unit may be immersed safely in liquids under substantial pressure allowing thermostatic control to be achieved in the chemical, automotive, aerospace, HVAC, and environmental fields. UL and C-UL certified.

CPO/CPC Series

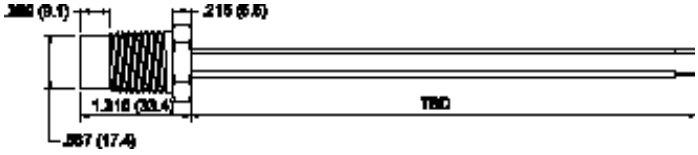

CPO/CPC Series - SPECIFICATIONS

Electrical ratings (Silver contacts)	125VAC, 15 Amps, Resistive, 100,000 Cycles 250VAC, 10 Amps, Resistive, 100,000 Cycles
(Gold contacts)	120VAC, 125VA (Pilot duty), 100,000 Cycles 30VDC, 1 Amp, Resistive, 100,000 Cycles
Inductive load ratings	120VAC, 5.8FLA, 34.8LRA, 6,000 Cycles 240VAC, 2.9FLA, 17.4LRA, 6,000 Cycles
Temperature range	50ºF to 320ºF (10ºC to 160ºC)
Differential	15ºF to 100ºF (8ºC to 56ºC)
Environmental temperature	32ºF to 350ºF (0ºC to 177ºC)
Insulation resistance	100M Ω or more (with a 500VDC megger)
Circuit resistance	50m Ω or less (initial value)
Dielectric strength	1500VAC/1 minute
Pressure rating	500PSI
Materials	
Body & tube	Brass or stainless steel - 1/2" NPT
Headfill	Epoxy filled
Contacts	Silver or gold
Wire	18AWG, UL3173, Black 18AWG, UL1015, Black Other lead options available

It is the customer's sole responsibility to specify and determine the suitability of a particular control or component based on their unique individual applications and requirements

(714) 917-1333 • (800) 257-3526 • FAX (714) 917-1355 • E-mail: sales@selcoproducts.com

Adjustable Thermostats

S200A & S200-F-1 Series

Model S200-A
Control knob sold separately
Knob part number:
S150-250 (no line)
S151-250 (with line)

Cap part number:
C150 (no line)
C151 (with line)

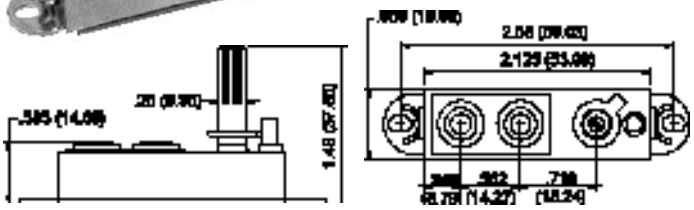

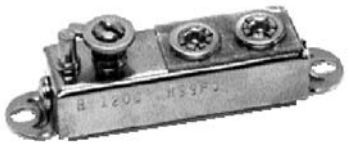

Model S200-F-1

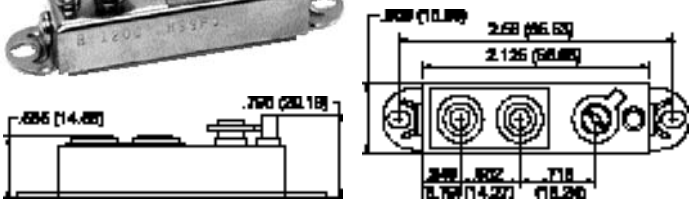

The S200 Series thermostats have a base plate with a high coefficient of expansion. A spring of low-expansion alloy is welded at each end of the base plate. When the base plate is heated it expands and the alloy spring moves in a downward direction allowing the large silver contacts to open. Often referred to as “expanding-action thermostats,” they are mounted directly on a heated surface and are ideally suited to a number of commercial applications. Selco carries a line of durable, easy-grip control knobs for use with adjustable models. Model S200-F-1 is available with fixed set points.

SPECIFICATIONS

Electrical ratings	120/240VAC, 1600 watts maximum 100,000 Cycles
Sensitivity	Approximate 2ºF
Case width	11/16”
Overall length	2-7/8”
S200-A height	1-1/2” overall including shaft
S200-F-1 height	3/4”
Approvals	UL File No. E79570(M) CSA File No. LR-50152-2

Models available from stock - subject to availability

Model Number	Temperature Range Minimum - Maximum	Overall Height	** Adjustment
S200-A	Room Temperature - 525ºF ± 20ºF	1.50”	2ºF for every 1º angular rotation
S200-A-1325	Room Temperature - 425ºF ± 20ºF	1.75”	2ºF for every 1º angular rotation
S200-A-2051	Room Temperature - 205ºF ± 10ºF	1.43”	2ºF for every 1º angular rotation
S200-F-1	Room Temperature - 575ºF ± 25ºF	set screw	2ºF for every 1º angular rotation

* Temperature calibration service is available - consult Selco for details
** Turn clockwise to increase temperature setting

It is the customer’s sole responsibility to specify and determine the suitability of a particular control or component based on their unique individual applications and requirements

(714) 917-1333 • (800) 257-3526 • FAX (714) 917-1355 • E-mail: sales@selcoproducts.com

Adjustable Thermostats

TL and TOR Series

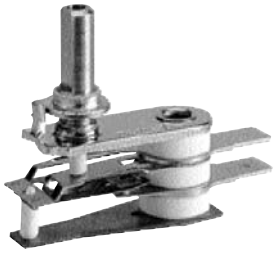

TL 01 Model
Adjustable Thermostat

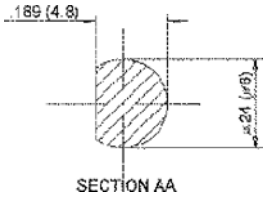

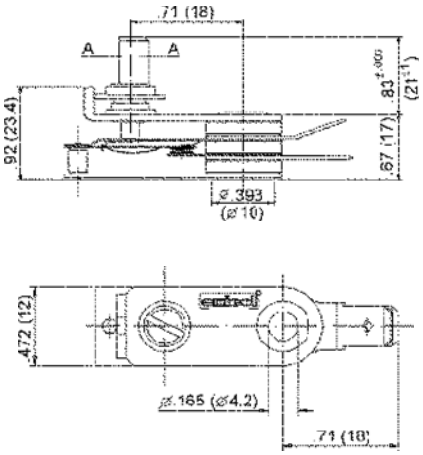

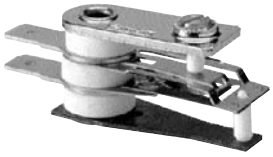

TL 02 Model
Fixed Thermostat

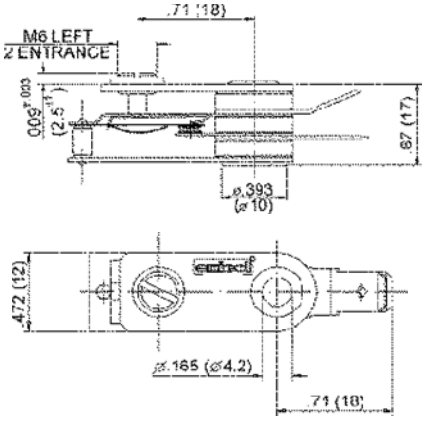

APPLICATIONS

- Grills
- Irons
- Fryers

These bimetal thermostats are available in adjustable or fixed settings. The position of the adjustment shaft determines the desired temperature. Contacts are “snap-action” which extends the electrical life or “creep-action” which carry no built in differential. They are primarily used in irons, grills, small electric ovens, as well as commercial and industrial heating devices.

SPECIFICATIONS

Electrical ratings	
TL Models	250VAC, 10 Amps, Resistive, 60Hz 100,000 Cycles
TOR Models	120VAC, 15 Amps, Resistive, 2.6FLA, 15.6LRA 240VAC, 10 Amps, Resistive, 1.3FLA, 7.8LRA 100,000 Cycles
Temperature range	
TL Models	212ºF to 410ºF (100ºC to 210ºC) Tolerance: ±18ºF (±10ºC) 410ºF to 518ºF (210ºC to 270ºC) Tolerance: ±27ºF (±15ºC)
TOR Models	90ºF to 550ºF (32ºC to 287ºC) **Tolerance:** ±5% of the calibration temperature or 10ºF whatever is greater
Dielectric strength	
TL Models	1500VAC/1 minute
Approvals	UL C-UL VDE

TOR Model - Adjustable Thermostat

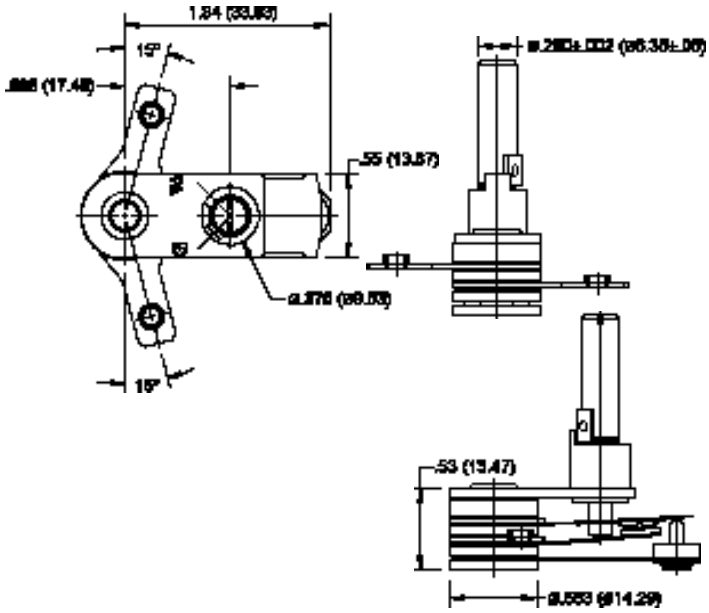

TOR Model - Fixed Thermostat

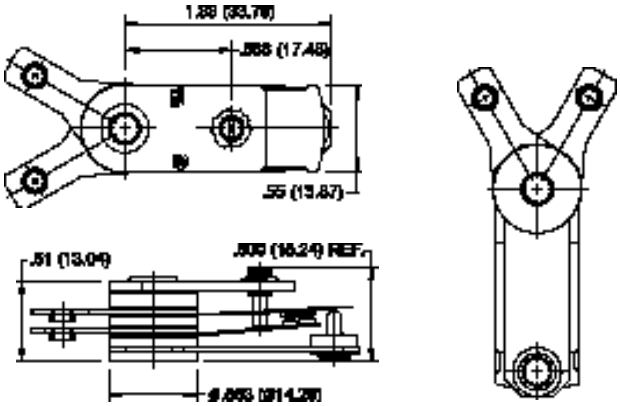

It is the customer’s sole responsibility to specify and determine the suitability of a particular control or component based on their unique individual applications and requirements

(714) 917-1333 • (800) 257-3526 • FAX (714) 917-1355 • E-mail: sales@selcoproducts.com

Cold Capillary Controls

WD and WS Series

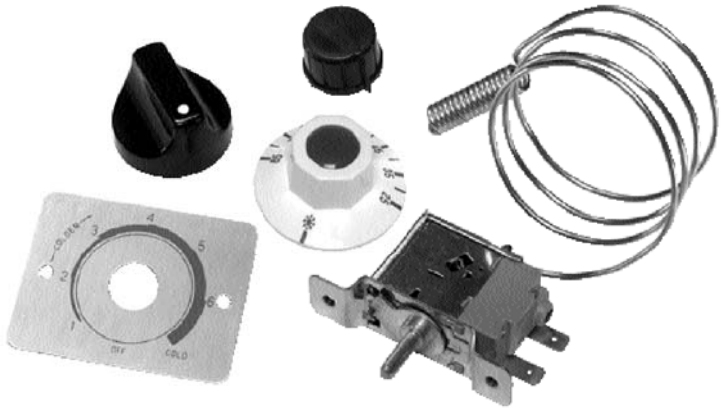

APPLICATIONS

- Refrigerators

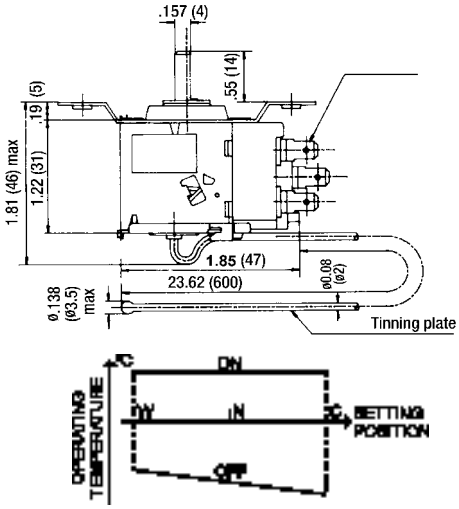

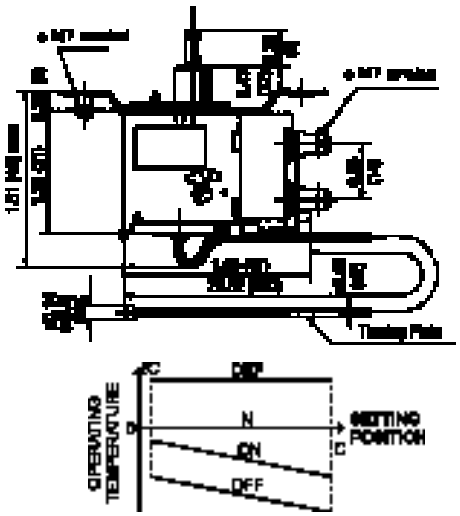

WD Series - Constant Cut-in Thermostat

The WD Series provides Forced ON or Forced OFF and automatic cycle defrosting in refrigeration systems. Cut-in temperature varies at each cam position, but defrosting temperature remains the same. It is used as a component of controlling in 2-door and 2-temperature refrigerators and freezers. Mainly built to custom specifications, it comes complete with a variety of mounting hardware, including brackets, terminals, dial plates and knobs.

SPECIFICATIONS

Temperature range	ON: +37ºF to 43ºF (3ºC to 6ºC) OFF: -22ºF to 24ºF (-30ºC to -4ºC)
Maximum temperature range	66ºF (19ºC)
Differential	14ºF to 64ºF (8ºC to 36ºC)
Contact resistance	<50m Ω
Insulation resistance	>100m Ω
Dielectric strength	AC 50/60Hz, 1500V/1 minute
UL/CSA electrical ratings	125VAC, 8 Amps, Resistive 250VAC, 5 Amps, Resistive
Inductive load ratings	125VAC, 6FLA, 36LRA 250VAC, 4FLA, 24LRA
VDE electrical ratings	250VAC, 5 Amps
Approvals	UL File No. E195847, SDFY2 C-UL File No. E195847, SDFY8 VDE SEMKO

WS Series - Push Button Defrost Thermostat

The WS Series has a combined function of refrigerator cycling control and manual defrosting with a push button shaft in the center of the adjusting shaft. Defrost starts when the push button is pressed, and it terminates automatically as temperature rises to a pre-set point. Then the unit continues its normal running cycle.

SPECIFICATIONS

Temperature range	-18ºF to 45ºF (-28ºC to 7ºC)
Maximum temperature range	32ºF (18ºC)
Differential	12ºF to 25ºF (6ºC to 14ºC)
Defrost reset temperature	6ºF to 12ºF (3ºC to 7ºC)
Contact resistance	<50m Ω
Insulation resistance	>100M Ω
Dielectric strength	AC 50/60Hz, 1500V/1 minute
VDE electrical ratings	250VAC, 5 Amps
Shift of defrosting shaft	3.7 ± 5mm

It is the customer's sole responsibility to specify and determine the suitability of a particular control or component based on their unique individual applications and requirements

(714) 917-1333 • (800) 257-3526 • FAX (714) 917-1355 • E-mail: sales@selcoproducts.com

Cold Capillary Controls

WK and WK-H Series

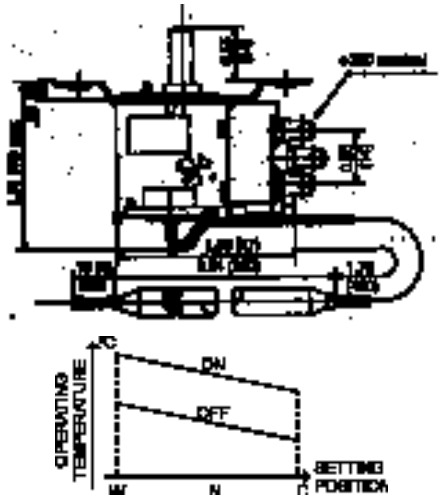

SPECIFICATIONS

Temperature range	-31ºF to 104ºF (-35ºC to 40ºC) with bulb -31ºF to 90ºF (-35ºC to 32ºC) no bulb
Maximum temperature range	36ºF (20ºC)
Differential	4ºF to 9ºF (2ºC to 5ºC)
Tolerance	2.7ºF (1.5ºC) at calibration point 3.6ºF (2.0ºC) at non-calibration point
Contact resistance	<50m Ω
Insulation resistance	>100m Ω
Dielectric strength	AC 50/60Hz, 1500V/1 minute
UL/CSA/VDE electrical ratings *Model WK*	125/250VAC, 20 Amps, Resistive 100,000 Cycles
Inductive load ratings	125/250VAC, 20FLA, 80LRA
UL/CSA/VDE electrical ratings *Model WK-H*	125/250VAC, 20 Amps, Resistive 100,000 Cycles
Inductive load ratings	125/250VAC, 25FLA, 100LRA
Approvals	UL File No. E195847, SDFY2 C-UL File No. E195847, SDFY8 VDE

APPLICATIONS

- Coolers
- Freezers
- Refrigerators
- Ice machines
- Air conditioners

The WK and WK-H Series general purpose thermostats provide the ideal temperature control solution for a wide variety of refrigeration and air-conditioner applications. This cold control provides accurate temperature control and high sensitivity for a wide range of refrigerators, freezers, beverage coolers, and display case applications. High current capability switch of SPST or SPDT. There is a narrow differential and a forced off function. THe WK and WK-H Series can be used in DC current with inductive loads. Fixed operating temperatures (without shaft) ar also available. With universal adaptability in mind, the WK and WK-H Series is designed to replace many OEM controls, offering the user additional options and convenience during equipment manufacturing or repair. Mainly built to custom specifications, it comes complete with a variety of mounting hardware including brackets, terminals, dial plates, and knobs.

Models available from stock - subject to availability

Part Number	Temperature Settings			
	Switch Action	Cold ºF	Normal ºF	Warm ºF
WK1V-115-020	ON	●	42	45
	OFF	34	37	●
WKF29.4S-005-120	ON	-5.8	5	12.2
	OFF	-20.2	-9.4	-2.2
WKF20.6E-007-020	ON	3	21	41
	OFF	4	16	33
WKF11V-109-021T	ON	35	●	46
	OFF	13	●	●
WKF1V-005-020-1	ON	38	●	43
	OFF	30	●	●
WKF11A-102-022 (Constant Cut-In)	ON	39	39	39
	OFF	12	21	30
WK15.6S-408-060	ON	64.4	●	90
	OFF	60.08	●	●

It is the customer's sole responsibility to specify and determine the suitability of a particular control or component based on their unique individual applications and requirements

(714) 917-1333 ● (800) 257-3526 ● FAX (714) 917-1355 ● E-mail: sales@selcoproducts.com

Brackets, Terminals and Adjustment Shafts

Options for WD, WS, WK and WK-H Series

Bracket Options

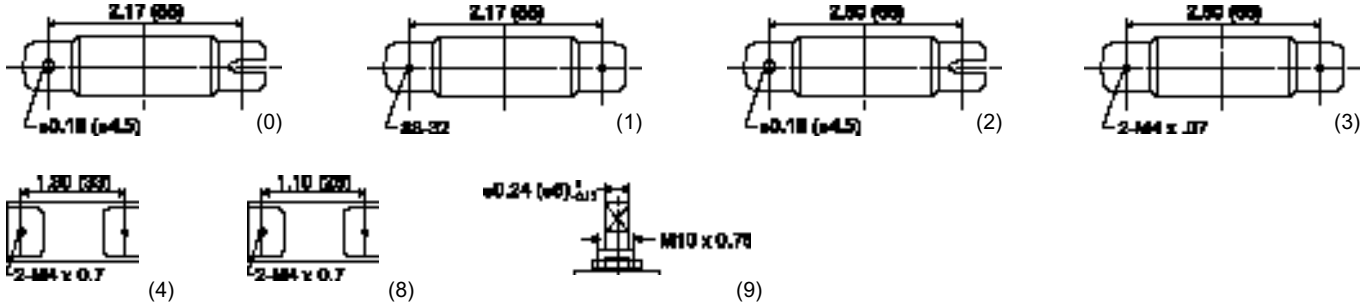

Terminal Options

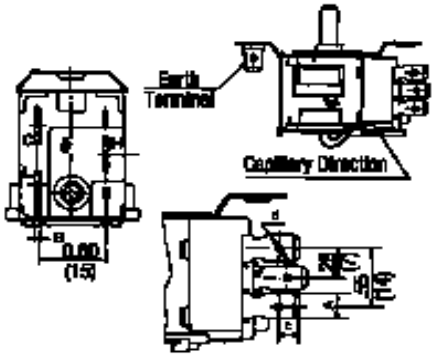

Terminal Number	A x B (mm)	C (mm)	D (inches)	Code	
				Terminal	Ground Terminal
#187	4.75 x 0.55	3.2 + 0.25	1.4	1 or 5	1 or 3
#250	4.75 x 0.8	4.2 + 0.3	1.4	3 or 7	5 or 7
#187	6.35 x 0.8	3.2 + 0.25	1.6	2 or 6	2 or 4

Terminal No. 1, 2, and 3 - are the same direction as capillary
Terminal No. 5, 6, and 7 - are the opposite direction

Ground Terminal No. 1, 2, and 5 - are in the front of the bracket
Ground Terminal No. 3, 4, and 7 - are in the rear of the bracket

Adjustment Shaft Options

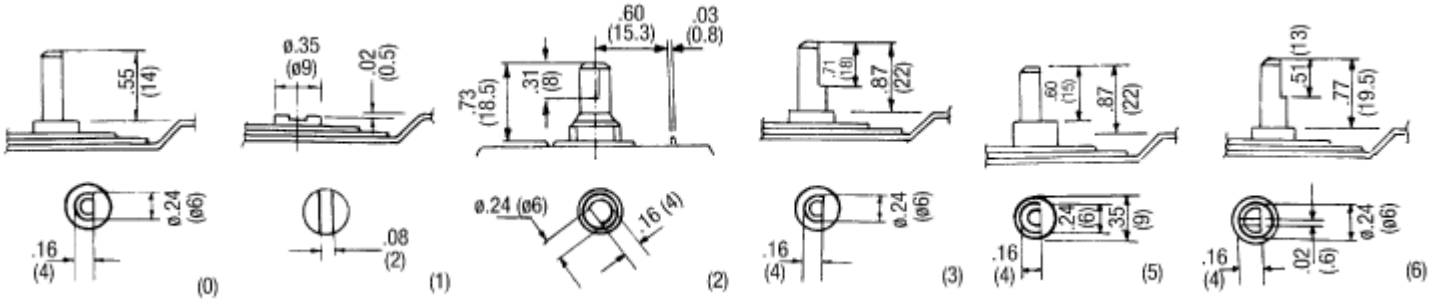

For WS Series

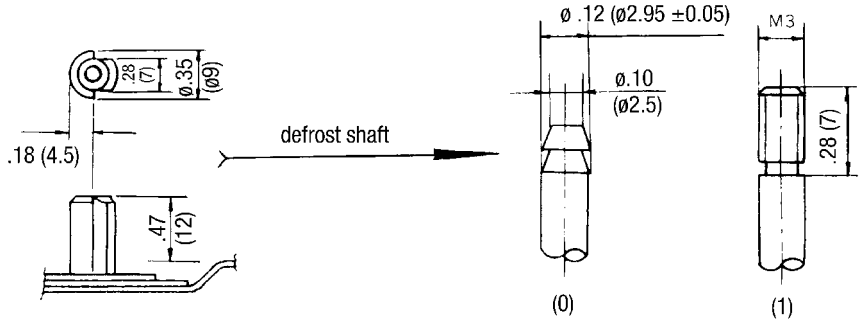

It is the customer's sole responsibility to specify and determine the suitability of a particular control or component based on their unique individual applications and requirements

(714) 917-1333 • (800) 257-3526 • FAX (714) 917-1355 • E-mail: sales@selcoproducts.com

Cold Capillary Controls

KD Series - Control with S.P.S.T. Switch and Auxiliary Switch

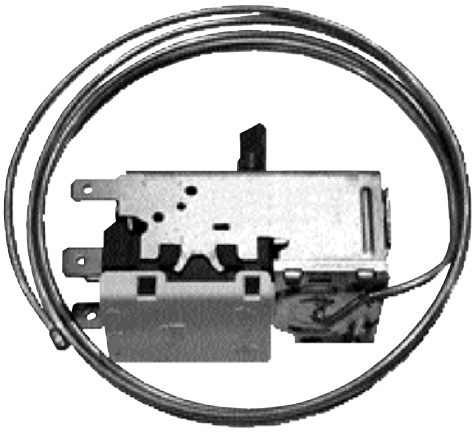

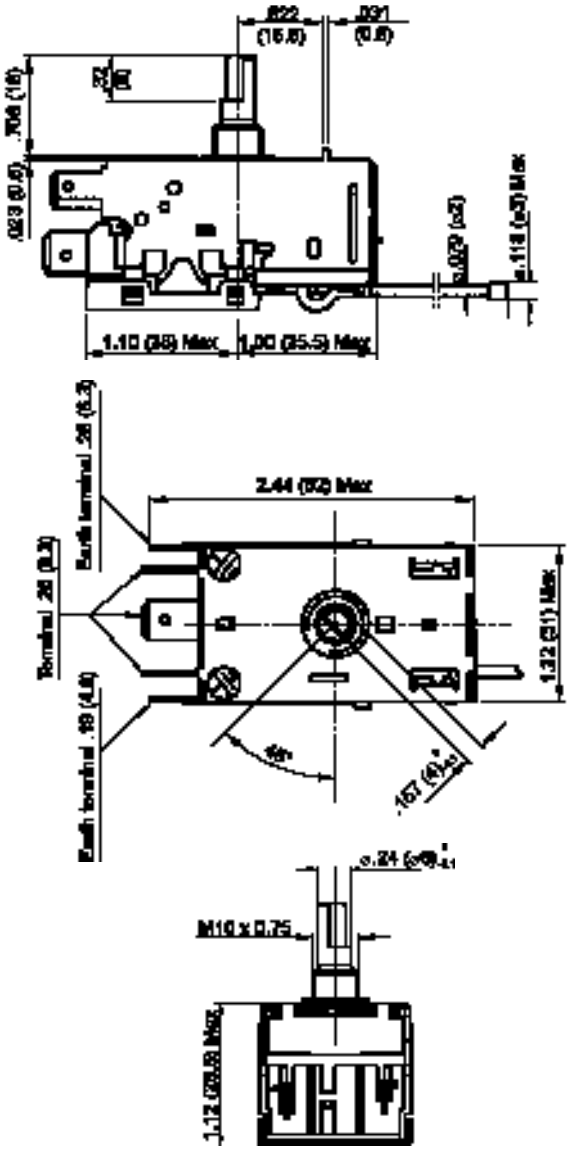

APPLICATIONS

- Refrigerators

Temperature control with S.P.S.T. switch and auxiliary switch for OFF position. Automatic defrost function by constant cut-in value.

Terminal 3-4: Closes on temperature rise

Terminal 3-6: Opens in OFF position

SPECIFICATIONS

Electrical ratings	250V, 6 Amps, 50Hz
Inductive load ratings	250V, 6FLA, 36LRA 120V, 10FLA, 40LRA
Temperature range	-25ºF to 42ºF (-32ºC to 6ºC)
Adjustment range	4 to 18K
Tolerance	2.7ºF (1.5ºC) at calibration point 3.6ºF (2.0ºC) at non-calibration point
Contact resistance	<50m Ω
Insulation resistance	>100M Ω
Dielectric strength	AC 50/60Hz, 1500V/1 minute
Approvals	UL, C-UL, VDE

Typical Electrical Wiring Diagram

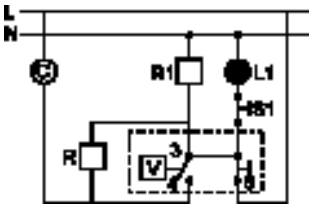

3-4 Main switch closes at temperature rise
3-6 Auxiliary switch opens in OFF position
C Compressor
R Defrost heater
R1 Frame heating
R2 Internal heating resistor (82k ohms)
L Lamp
S1 Door switch

Typical Function Chart

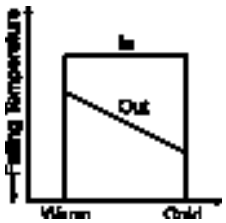

It is the customer's sole responsibility to specify and determine the suitability of a particular control or component based on their unique individual applications and requirements

(714) 917-1333 • (800) 257-3526 • FAX (714) 917-1355 • E-mail: sales@selcoproducts.com

Cold Capillary Controls

KP Series - Temperature Control with S.P.S.T. Switch

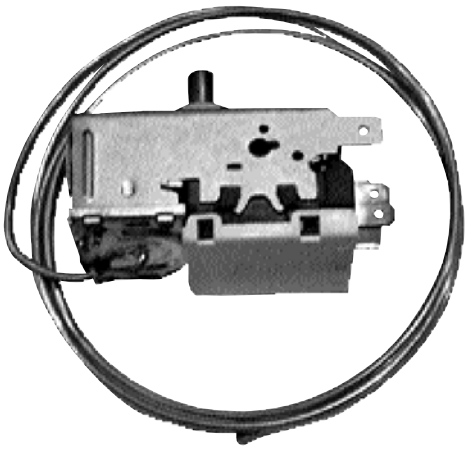

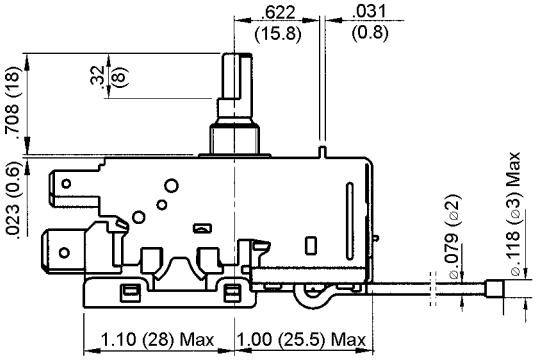

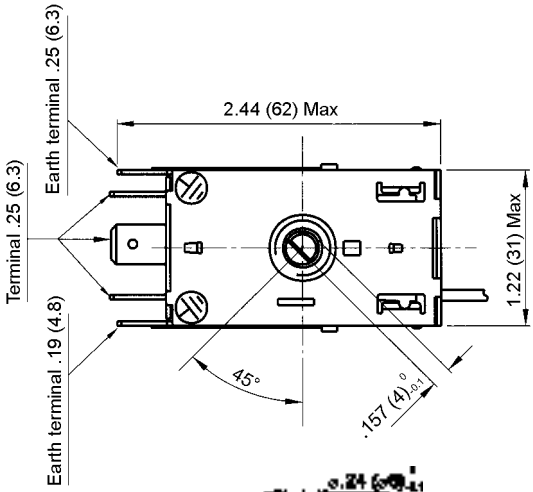

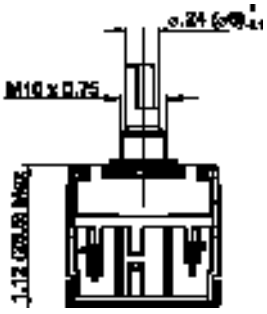

APPLICATIONS

- Automotive air conditioning
- Refrigerating/freezing devices

Temperature control with S.P.S.T. switch.

Terminal 3-4: Closes on temperature rise
In general, Type KP is classified into 2 basic versions:

Version A: KP with standard switching differential

Version B: KP with wide switching differential

SPECIFICATIONS

Electrical ratings	250V, 6 Amps, 50Hz
Inductive load ratings	250V, 6FLA, 36LRA 120V, 10FLA, 40LRA
Temperature range	-40ºF to 104ºF (-40ºC to 40ºC)
Adjustment range	Version A: 4 to 30K Version B: 5 to 15K
Differential	Version A: 3 to 14K Version B: 10 to 25K
Tolerance	2.7ºF (1.5ºC) at calibration point 3.6ºF (2.0ºC) at non-calibration point
Contact resistance	<50m Ω
Insulation resistance	>100M Ω
Dielectric strength	AC 50/60Hz, 1500V/1 minute
Approvals	UL, C-UL, VDE

Typical Electrical Wiring Diagram

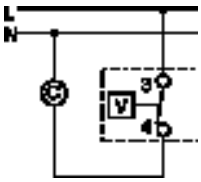

3-4 Main switch closes at temperature rise
C Compressor

Typical Function Chart

Version A

Version B

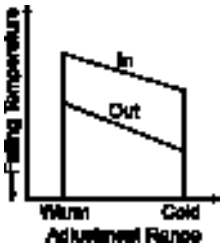

It is the customer's sole responsibility to specify and determine the suitability of a particular control or component based on their unique individual applications and requirements

(714) 917-1333 • (800) 257-3526 • FAX (714) 917-1355 • E-mail: sales@selcoproducts.com

Cold Capillary Controls

KS Series - Temperature Control with S.P.S.T. Switch and Automatic Defrost

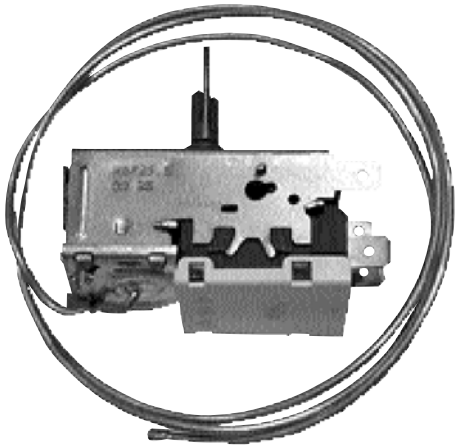

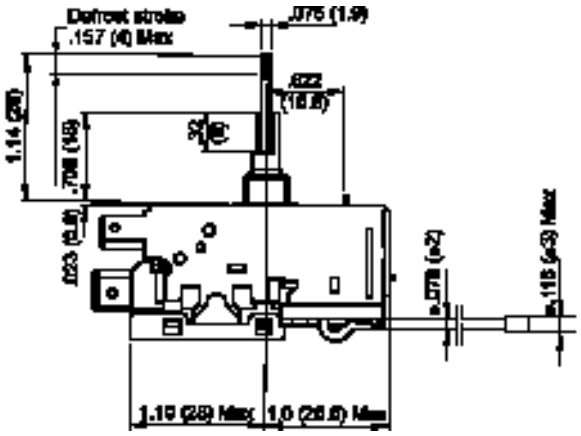

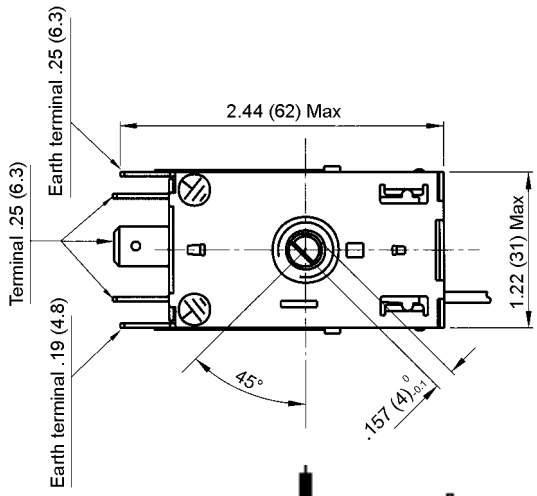

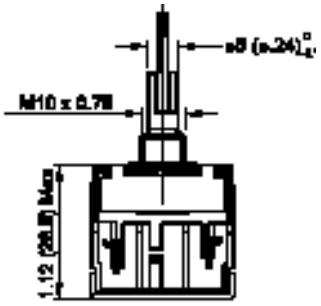

APPLICATIONS

- Automotive air conditioning
- Refrigerating/freezing devices

Closing with rising temperature and possibility to manually initiate a defrost function is achieved by pressing the defrost pin (stroke approximate .157 (4mm)) until latching. By doing this, the main switch is opened and locked until the defrost temperature is reached at the sensing point of the capillary which is normally fixed at the evaporator. After the defrost temperature has been reached, the pressure pin returns to its OFF position and the normal ON/OFF operation of the temperature control is reset. Defrost function can be initiated in any position of the dial shaft. If initiated in error, the defrost function can be cancelled by turning the dial shaft to the OFF position.

Terminal 3-4: Closes on temperature rise

SPECIFICATIONS

Electrical ratings	250V, 6 Amps, 50Hz
Inductive load ratings	250V, 6FLA, 36LRA 120V, 10FLA, 40LRA
Temperature range	-40ºF to 104ºF (-40ºC to 40ºC)
Adjustment range	4 to 14K
Differential	4 to 14K
Defrost temperature	Possible between 2ºC and 10ºC Differential of defrost temperature to WARM -IN minimum 4K
Tolerance	2.7ºF (1.5ºC) at calibration point 3.6ºF (2.0ºC) at non-calibration point 4.5ºF (2.5ºC) at defrost
Contact resistance	<50m Ω
Insulation resistance	>100M Ω
Dielectric strength	AC 50/60Hz, 1500V/1 minute
Approvals	UL, C-UL, VDE

Typical Electrical Wiring Diagram

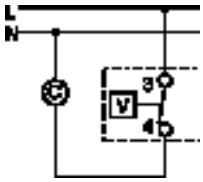

3-4 Main switch closes at temperature rise
C Compressor

Typical Function Chart

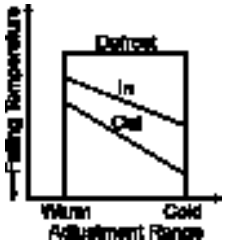

It is the customer's sole responsibility to specify and determine the suitability of a particular control or component based on their unique individual applications and requirements

(714) 917-1333 • (800) 257-3526 • FAX (714) 917-1355 • E-mail: sales@selcoproducts.com

Cold Capillary Controls

KX Series - Temperature Control with S.P.S.T. Switch and Signal

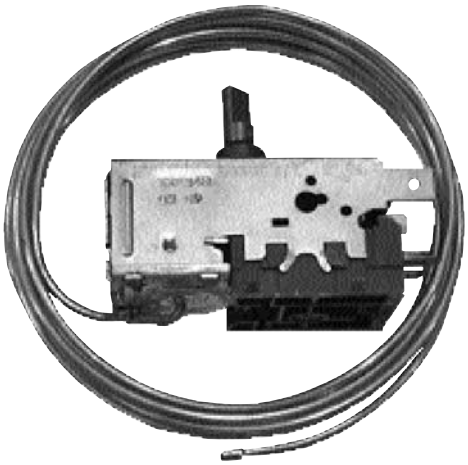

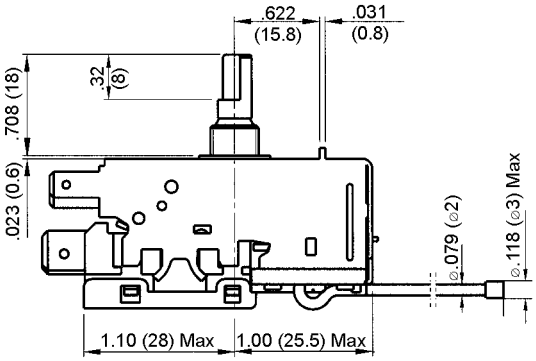

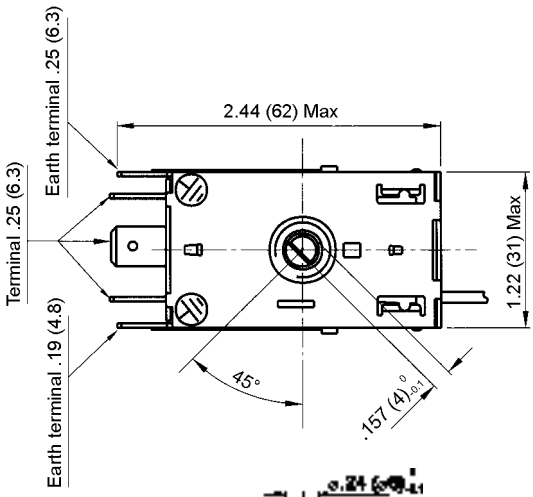

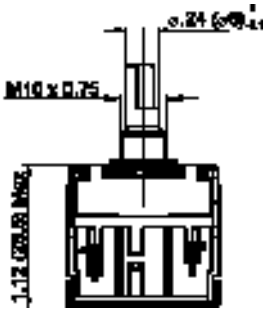

APPLICATIONS

- Freezers

Terminal 3-4: Closes on temperature rise

Terminal 3-6: Closes when warning temperature has been reached

SPECIFICATIONS

Electrical ratings	250V, 50Hz Terminal 3-4: 6 Amps Terminal 3-6: 0.1 Amps
Temperature range	-40ºF to 104ºF (-40ºC to 40ºC)
Adjustment range	4 to 30K
Differential	3 to 14K
Signal differential	4 to 7K
Tolerance	2.7ºF (1.5ºC) at calibration point 3.6ºF (2.0ºC) at non-calibration point
Contact resistance	<50m Ω
Insulation resistance	>100M Ω
Dielectric strength	AC 50/60Hz, 1500V/1 minute
Approvals	UL, C-UL, VDE

Typical Electrical Wiring Diagram

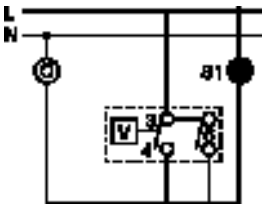

3-4 Main switch closes at temperature rise
3-6 Signal switch closes at temperature rise
C Compressor
S1 Warning lamp indicates to high temperature

Typical Function Chart

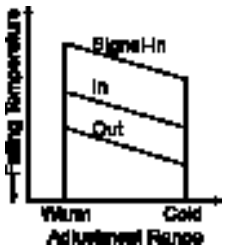

It is the customer's sole responsibility to specify and determine the suitability of a particular control or component based on their unique individual applications and requirements

(714) 917-1333 • (800) 257-3526 • FAX (714) 917-1355 • E-mail: sales@selcoproducts.com

Cold Capillary Controls - Accessories

Brackets, Terminals, Dial Plates and Knobs

WXN005

WKP003

WKP004

WKP005

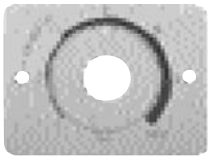

KP002

KP006

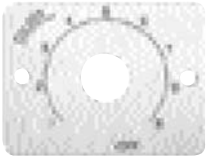

KP007

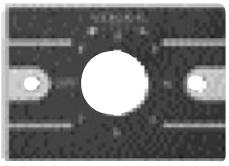

WKB001

XN001A

XN001

WAN002

WXN002B

WZJ001

WWZ001

JD702

WLD001

BT001

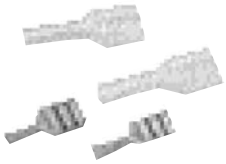

BT001 JT002

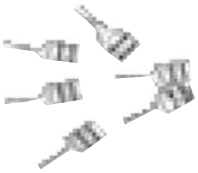

JT001

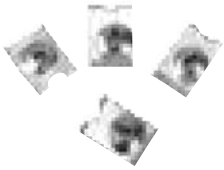

WDJ001

WLD007

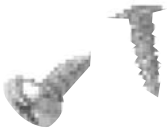

WLD008

It is the customer's sole responsibility to specify and determine the suitability of a particular control or component based on their unique individual applications and requirements

(714) 917-1333 • (800) 257-3526 • FAX (714) 917-1355 • E-mail: sales@selcoproducts.com

Bulb & Capillary Thermostats

SHQ and SHR Series

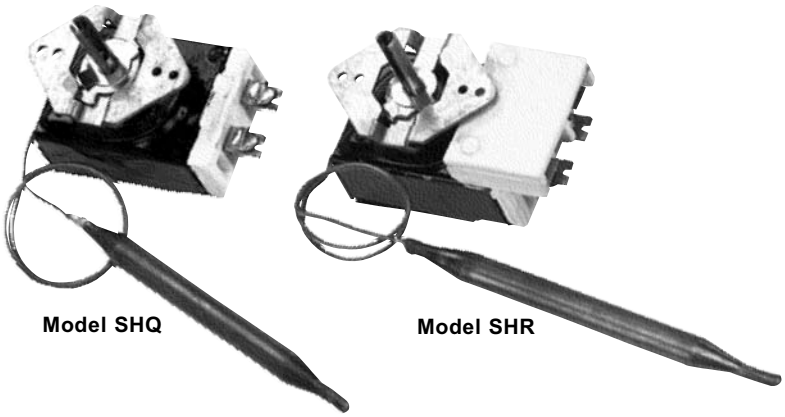

Model SHQ - S.P.S.T. - Normally closed, open on temperature rise

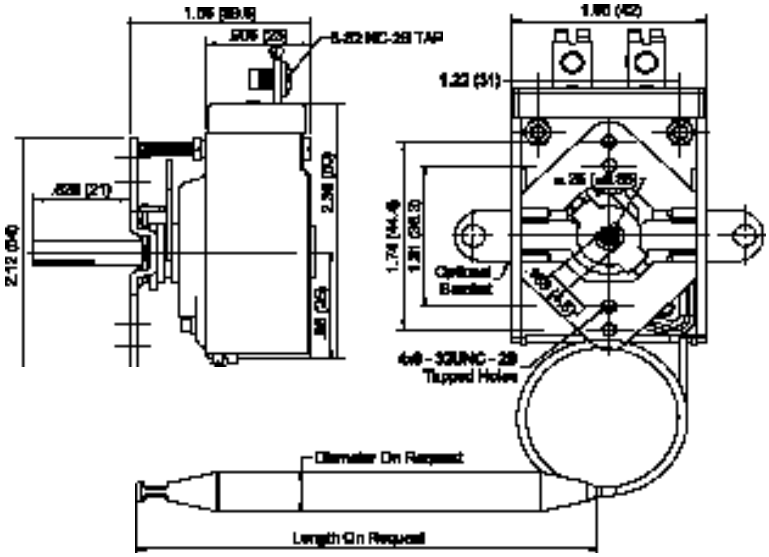

Model SHR - Auxiliary contact - 30 Amps, 250 Volts

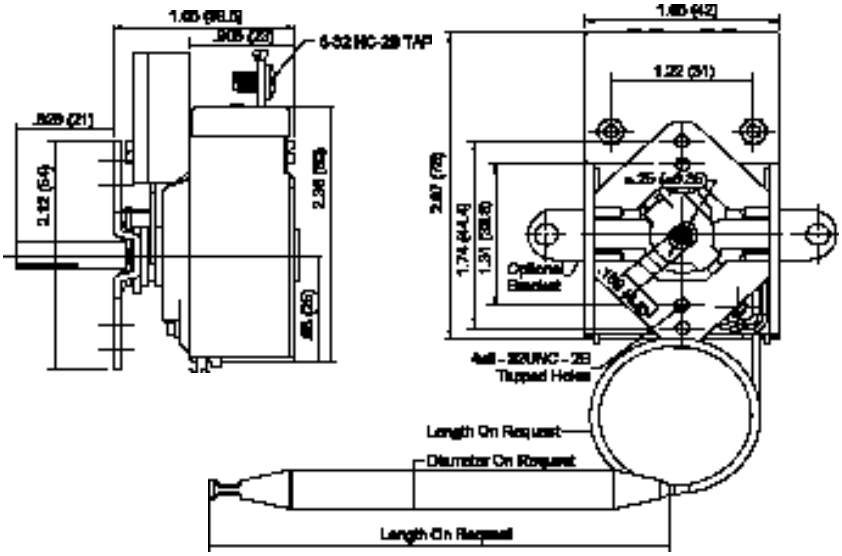

APPLICATIONS

- Electric heaters
- Cooking equipment
- Commercial food equipment

These 30-Amp Bulb and Capillary Thermostats are designed to be a direct replacement for many different controls. This series (SHQ, SHR, SJQ, and SJW) are electro-mechanical on/off switches that are activated by temperature. They are commercial electric thermostats that are SPST or DPST. Fixed or adjustable temperatures with or without auxiliary switches and/or pilot-duty ratings are available on special order. The SJW model includes a mechanical "positive off" feature in the dial "off" position. A variety of control knobs and bezels are available upon request.

SPECIFICATIONS

Temperature range	-4ºF to 608ºF (-20ºC to 320ºC)
Electrical ratings	120/240VAC, 30 Amps, Resistive 100,000 Cycles
Material options	Copper, stainless steel, nickel plated
Options can include	Compression fittings for mounting, gold contacts, .250 quick connects, customer markings, angular rotations, shaft lengths, back fixing plate bracket (2 holes .5mm dia., 58mm distance), plastic coating to prevent against moisture and dust
Model variations	
SHQ	S.P.S.T., Normally closed (open on temp. rise)
SHR	Auxiliary contact - 30 Amp, 250 Volt Available on request with 10-32 screw terminals
SJQ	D.P.S.T. - Double pole Normally closed (open on temperature rise) 2 x 30 Amp, 250 Volt
SJW	D.P.S.T. - Double pole Normally closed (open on temperature rise) 2 x 30 Amp, 250 Volt Positive off switch available on request

Optional bracket for all 30-Amp Models

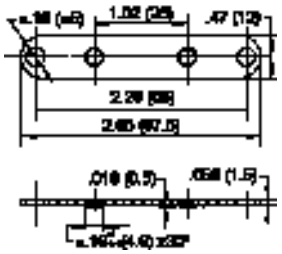

It is the customer's sole responsibility to specify and determine the suitability of a particular control or component based on their unique individual applications and requirements

(714) 917-1333 • (800) 257-3526 • FAX (714) 917-1355 • E-mail: sales@selcoproducts.com

Bulb & Capillary Thermostats

SJQ and SJW Series

Model SJQ

Model SJQ
D.P.S.T. - Normally closed, open on temperature rise
2 x 30 Amps, 250 Volts

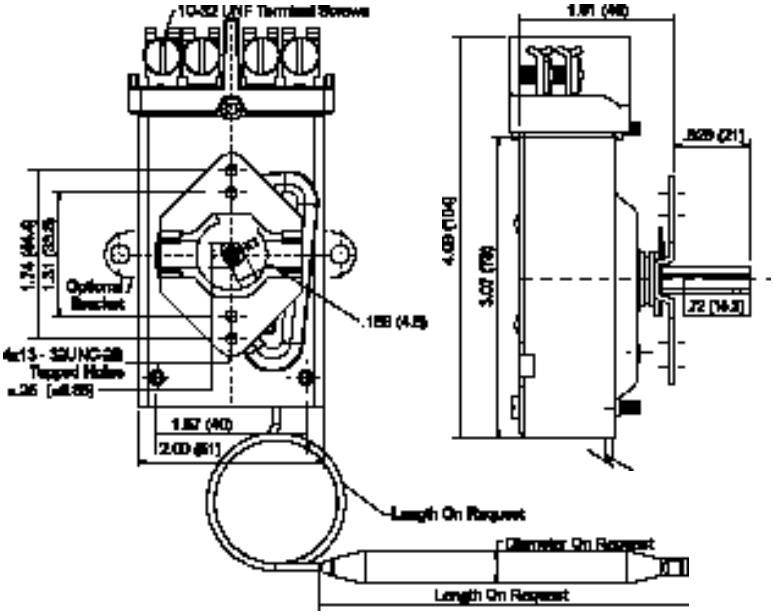

Model SJW

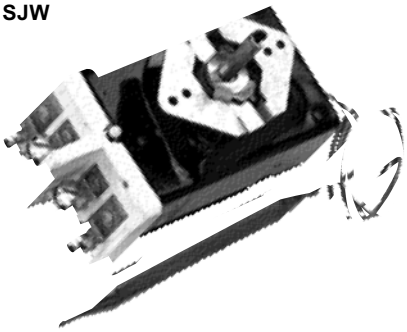

Model SJW
D.P.S.T. - Normally closed, open on temperature rise
2 x 30 Amps, 250 Volts - Positive off switch available upon request

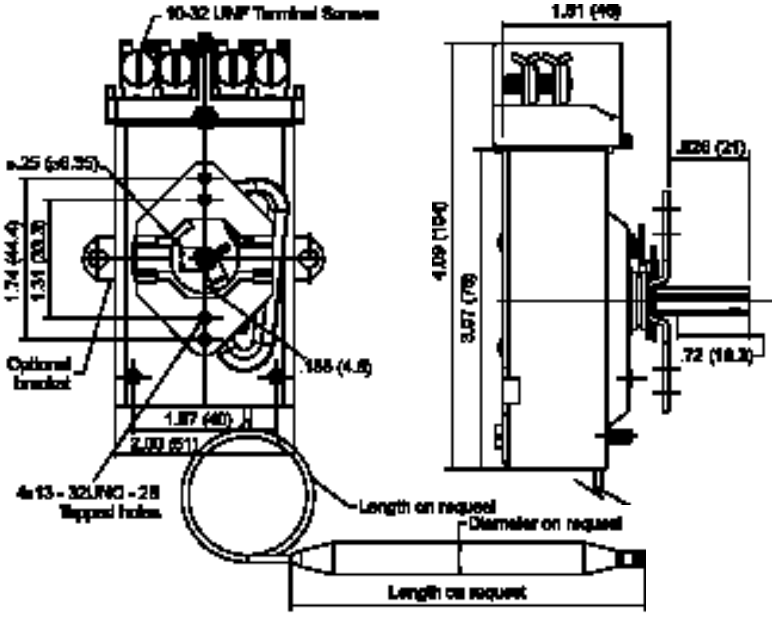

It is the customer's sole responsibility to specify and determine the suitability of a particular control or component based on their unique individual applications and requirements

(714) 917-1333 • (800) 257-3526 • FAX (714) 917-1355 • E-mail: sales@selcoproducts.com

Bulb & Capillary Thermostats

CAP Series - Automatic Reset

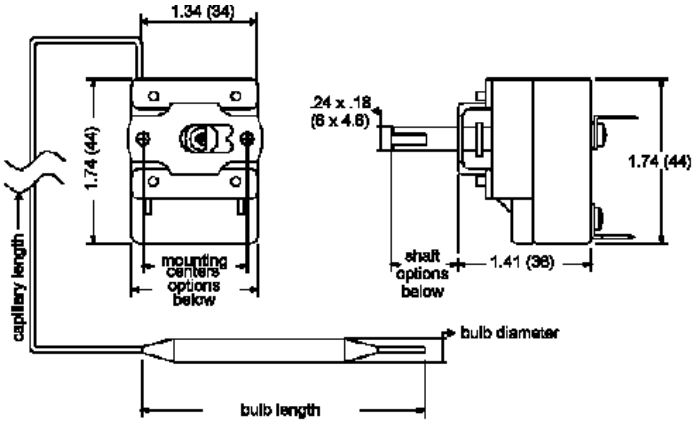

Shaft Length Shaft diameter ⌀24 (⌀6) x .18 (4.6)		Mounting Bracket Center Holes	
inches	mm	inches	mm
0.52	13	1.1	28/M4 thread
0.71	18	1.3	33/6-32 thread
0.87	22	1.7	44/6-32 thread
●	●	●	●

APPLICATIONS

- Heaters
- Test pots
- Food service equipment

Selco's bulb and capillary thermostats have a fluid filled bulb. When temperature rises, the bulb fluid expands via a capillary tube to an expandable diaphragm within the remote thermostat set point. The thermostats are compact and have ceramic bodies. Accessories include knobs and dials that allow selection of the temperature set point.

SPECIFICATIONS

Temperature range	32ºF to 752ºF (0ºC to 400ºC)
UL electrical ratings	120VAC, 20 Amps, 100,000 Cycles 1/4 Horsepower, Resistive 240VAC, 20 Amps, 100,000 Cycles 1/2 Horsepower, Resistive
VDE electrical ratings	250VAC, 5 Amps, Inductive 400VAC, 1 Amp, Inductive 10,000 Cycles
Options can include	Compression fittings for mounting, screw terminals, quick connects, gold contacts, SPDT, earth terminals, dial layouts, plastic coating to prevent moisture
Approvals	UL File No. E168164(S), XAPX2 C-UL File No. E168164(S), XAPX8 E.C. Declaration of Conformity RoHS Compliant
European	VDE, SEMKO, KEMA
	For A.G.A. consult Selco

Terminal Options

Horizontal

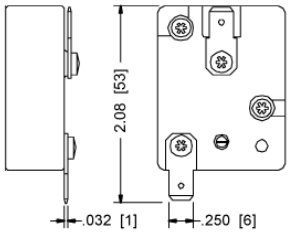

Vertical

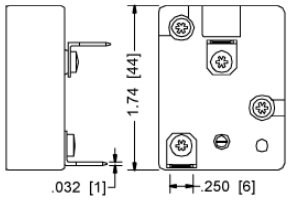

Screw (#8-32 or 4mm)

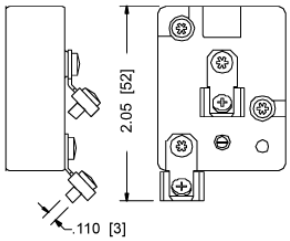

It is the customer's sole responsibility to specify and determine the suitability of a particular control or component based on their unique individual applications and requirements

(714) 917-1333 • (800) 257-3526 • FAX (714) 917-1355 • E-mail: sales@selcoproducts.com

Bulb & Capillary Thermostats

CAP Series - Automatic Reset

Models available from stock - subject to availability

Model Number	Temperature Range (ºF)	Set Point	Switch	Material	Capillary Length (inches)	Bulb Length (inches)	Bulb Diameter (inches)
CAP-40-105-R	40-105	Adjustable	SPST	Copper	60	6.0	.24
CAP-56-120-R	56-120	Adjustable	SPST	Stainless Steel	60	7.0	.20
CAP-57-104	57-104	Adjustable	SPST	Copper	43	4.7	.250
CAP-59-149	60-150	Adjustable	SPST	Stainless Steel	16	4.5	.19
CAP-60-450	60-450	Adjustable	SPST	Stainless Steel	36	3.0	.20
CAP-75-140-R	75-140	Adjustable	SPST	Stainless Steel	36	7	.20
CAP-85-195-R	85-195	Adjustable	SPST	Copper	36	3.6	.24
CAP-85-230-R	85-230	Adjustable	SPST	Copper	36	3.3	.24
CAP-100-320	100-320	Adjustable	SPST	Stainless Steel	36	4.5	.19
CAP-120-392	120-392	Adjustable	SPST	Stainless Steel	36	4.8	.19
CAP-120-428	120-428	Adjustable	SPST	Copper	36	5.1	.20
CAP-120-570	120-570	Adjustable	SPST	Copper	36	3.5	.20
CAP-122-482	122-482	Adjustable	SPST	Copper	36	3.6	.20
CAP-140-475	140-475	Adjustable	SPST	Copper	21	4.9	.20
CAP-140-752	140-752	Adjustable	SPST	Stainless Steel	17	6.2	.118
CAP-150-285	150-285	Adjustable	SPST	Copper	36	4.7	.250
CAP-176-400	176-400	Adjustable	SPST	Copper	47	4.6	.24

Standard Temperature Ranges	Tolerance	Differential
4-40ºC (40-104ºF)	±2ºC (±3.6ºF)	1.5º±1C (2.7º±1.8ºF)
30-90ºC (85-195ºF)	±3ºC (±5.4ºF)	4º±2ºC (7.2º±3.6ºF)
30-110ºC (85-230ºF)	±4ºC (±7.2ºF)	4º±2ºC (7.2º±3.6ºF)
50-200ºC (122-392ºF)	±8ºC (±14.4ºF)	7º±4ºC (12.6º±7.2ºF)
50-220ºC (122-428ºF)	±8ºC (±14.4ºF)	7º±4ºC (12.6º±7.2ºF)
50-250ºC (122-428ºF)	±9ºC (±16.2ºF)	7º±4ºC (12.6º±7.2ºF)
50-300ºC (122-570ºF)	±9ºC (±16.2ºF)	7º±4ºC (12.6º±7.2ºF)
60-400ºC (140-752ºF)	±12ºC (±21.6ºF)	9º±4ºC (16.2º±7.2ºF)

Shaft Length Shaft diameter ø24 (6) x .18 (4.6)		Mounting Bracket Center Holes	
inches	mm	inches	mm
0.52	13	1.1	28/M4 thread
0.71	18	1.3	33/6-32 thread
0.87	22	1.7	44/6-32 thread
-	-	●	●

Standard Mechanical Specifications

Temperature Ranges		Max. Ambient Exposure of Thermostat Case		Max. Working Temperature of the Bulb		Diameter of Copper Bulb				Diameter of Stainless Steel Bulb				Capillary Length	
						Length		Diameter		Length		Diameter			
ºF	ºC	ºF	ºC	ºF	ºC	inches	mm	inches	mm	inches	mm	inches	mm	inches	mm
140-752	60-400	302	150	752	400	●	●	●	●	6.3	160	.12	3	35.4	900
120-570	50-300	302	150	600	315	9.6	245	0.12	3.1	7.6	195	.12	3	35.4	900
120-570	50-300	302	150	600	315	6	152	0.15	4	●	●	●	●	35.4	900
120-570	50-300	302	150	600	315	3.4	87	0.19	5	3	76	.19	5	35.4	900
120-428	50-220	302	150	448	231	5	127	0.19	5	4	100	.19	5	35.4	900
120-392	50-200	302	150	410	210	3.7	96	0.24	6	4.3	109	.19	5	35.4	900
40-105	4-40	176	80	111	44	6	153	0.24	6	7	180	.19	5	35.4	900
85-195	30-90	212	100	210	99	3.6	92	0.24	6	4.3	109	.19	5	35.4	900
85-230	30-110	212	100	249	121	3	76	0.24	6	3.5	90	.19	5	35.4	900
85-248	30-120	212	100	270	132	3.6	92	0.24	6	2.9	75	.19	5	35.4	900
85-302	30-150	212	100	316	158	4.1	106	0.24	6	●	●	●	●	35.4	900

It is the customer's sole responsibility to specify and determine the suitability of a particular control or component based on their unique individual applications and requirements

(714) 917-1333 • (800) 257-3526 • FAX (714) 917-1355 • E-mail: sales@selcoproducts.com

Bulb & Capillary Thermostats

CAP-MR Series - Manual Reset

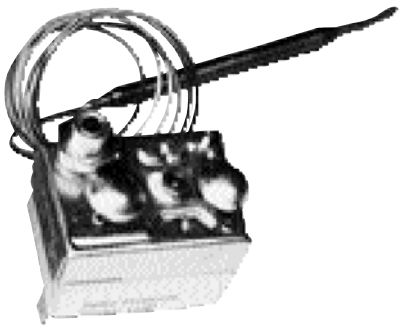

Black cover not pictured - each unit is equipped standard with a manual reset cover

APPLICATIONS

- Chillers
- Test systems
- Food service equipment

This non-recycling device trips at a predetermined, calibrated set point shutting down the thermal circuit until reactivated. The circuit will remain inactive until the thermostat is reactivated by manually depressing the reset button. Selco CAP-MR Series meets the requirement of U.L. trip-free device where the circuit remains open while the manual reset is held depressed.

SPECIFICATIONS

Temperature range	32ºF to 752ºF (0ºC to 400ºC)
UL electrical ratings	120VAC, 20 Amps, 6,000 Cycles 1/4 Horsepower, Resistive 240VAC, 20 Amps, 6,000 Cycles 1/2 Horsepower, Resistive
VDE electrical ratings	250VAC, 5 Amps, Inductive 400VAC, 1 Amp, Inductive 300 Cycles
Options can include	Compression fittings for mounting, screw terminals, quick connects, gold contacts, SPDT, earth terminals, DIP seal
Approvals	UL File No. E168164(S), XAPX2 C-UL File No. E168164(S), XAPX8 E.C. Declaration of Conformity
European	VDE, SEMKO, KEMA, RoHS Compliant For A.G.A. consult Selco

Models available from stock - subject to availability

Model Number	Set Point (ºF)	Capillary Length (inches)	Bulb Length (inches)	Bulb Dia. (inches)	Terminals
CAP-MR-140	140 ± 5.5	36	3.6	.24	.250 quick connects
CAP-MR-179	179 ± 5.5	36	3.3	.24	.250 quick connects
CAP-MR-200	200 ± 5.5	36	3.59	.24	.250 quick connects
CAP-MR-245	245 ± 7.2	12	3.3	.24	screw type
CAP-MR-284	284 ± 10.8	36	4.48	.19	.250 quick connects
CAP-MR-320	320 ± 10.8	36	3.0	.24	screw type
CAP-MR-392	392 ± 10.8	36	3.3	.24	.250 quick connects
CAP-MR-450	450 ± 16	36	4.7	.19	.250 quick connects
CAP-MR-500	500 ± 16	36	3.42	.19	.250 quick connects
CAP-MR-572-B	572 ± 18	36	3.0	.19	.250 quick connects
CAP-MR-700	700 ± 18	36	6.0	.12	.250 quick connects

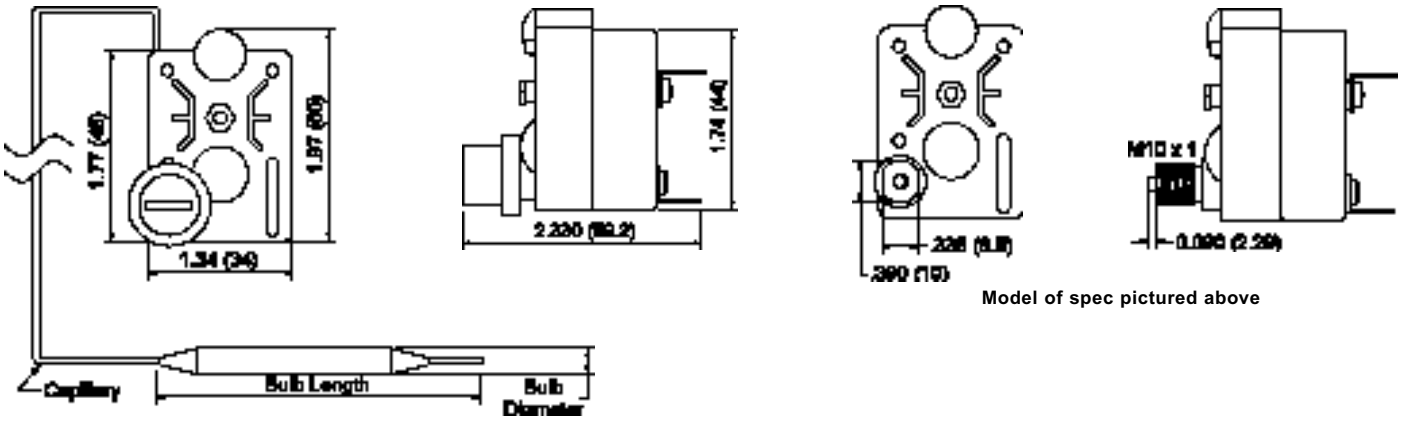

Model of spec pictured above

Terminal Options

Horizontal

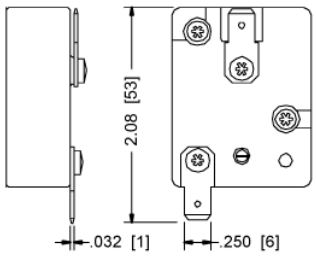

Vertical

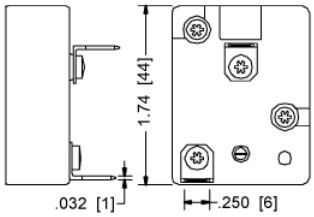

Screw (#8-32 or 4mm)

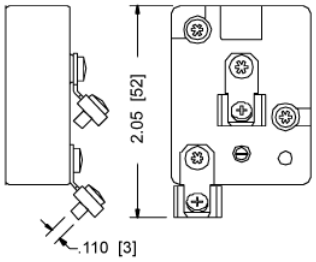

It is the customer's sole responsibility to specify and determine the suitability of a particular control or component based on their unique individual applications and requirements

(714) 917-1333 • (800) 257-3526 • FAX (714) 917-1355 • E-mail: sales@selcoproducts.com

Bulb & Capillary Thermostat Accessories

Control Knobs and Dials

Selco's line of Bulb & Capillary thermostats come complete with a variety of brackets, terminals, dial plates, knobs and adjustment shaft options to accommodate a wide range of installation requirements. Custom printing available.

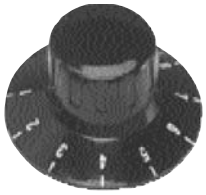

2266A/68-118

CAP-XXX-KNOB-1
(model shown with bezel)

A1010-3-250-SS2B

CAP-COMET-KNOB

CAP-XXX-KNOB
(model shown with bezel)

CAP-1-10-KNOB

2302L

DRD157006/109
DRD157006/110

Models available from stock - subject to availability

Part Number	Diameter		Height		Material	Printing
	inches	mm	inches	mm		
2266A/68-118	2.62	66.5	1.00	25.5	Thermoplastic	Numbers 1 thru 8, OFF
2302L	1.56	39.5	0.96	24.5	Thermoplastic	White Dot
A1010-3-250-SS2B	1.85	47	0.84	21.5	ABS with Aluminum Top	Optional
CAP-1-10-KNOB	1.65	42	0.63	16	Thermoplastic	Number 1 thru 10
CAP-ARROW-KNOB	1.44	36.7	0.38	9.6	Thermoplastic	White Swirl and Number 0
CAP-COMET-KNOB	1.65	42	0.63	16	Thermoplastic	White Swirl and Number 0
CAP-XXX-KNOB	1.65	42	0.63	16	Thermoplastic	Optional
CAP-XXX-KNOB-1	1.44	36.7	0.38	9.6	Thermoplastic	Optional
DRD157006/109	1.14	29	0.69	17.5	Nylon	White Arrow (same side as flat of 'D' shaft)
DRD157006/110	1.14	29	0.69	17.5	Nylon	White Arrow (90º from flat)
CAP-BEZELS	2.36	60	0.16	4.2	Plated	●
CAP-BEZELS-1	1.91	48	0.15	3.7	Plated	●

It is the customer's sole responsibility to specify and determine the suitability of a particular control or component based on their unique individual applications and requirements

(714) 917-1333 • (800) 257-3526 • FAX (714) 917-1355 • E-mail: sales@selcoproducts.com

Value Added Services

Custom Assembly Services Providing Cost and Time Savings As Easy As *1-2-3*

During the course of production, a product may have to go to several stations for soldering, crimping, or cutting. With Selco's value-added services, customers can order the product fully assembled, saving time in all areas - purchasing, receiving, labor, and production.

This valuable service offers a variety of custom assemblies and specialty product add-ons for Selco's line of thermal products. Selco's value added service provides custom brackets, specialty connectors and crimp terminals, solder or quick disconnect wire attachment, epoxy over-molding, application tooling, and lead wire and cable assembly. Also offered are special kits containing disc thermostats, thermal cut-offs, insulation sleeving, and molex connectors. Additionally, with Selco's volume purchasing of these small speciality items, customers eliminate paying premium prices.

Call to today to find out how Selco can eliminate the hassle of assembly and purchasing details that end up costing valuable time and money.

1

Call, fax or e-mail Selco's friendly and helpful customer support and select from Selco's large inventory of temperature sensors.

2

Choose from the various value added services provided by Selco (i.e., custom brackets, epoxy over-molding).

Consult with Selco customer support for further available value added services.

3

The fully assembled product is complete and ready to install in your application.

It's as easy as 1-2-3 and saves time and money.

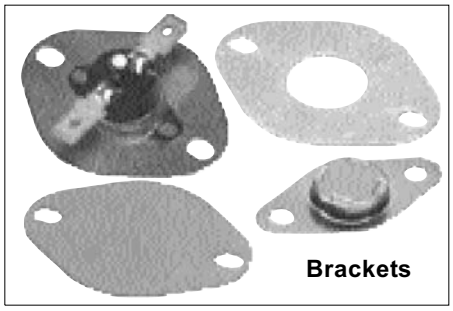

Brackets

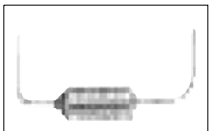

Lead Bending

Connectors

Mylar Sleeving

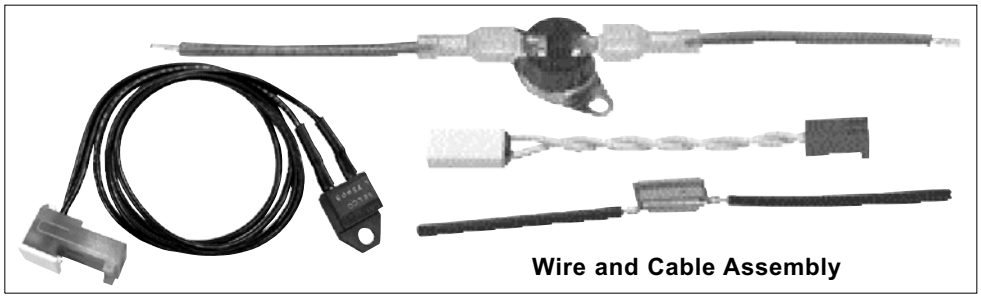

Wire and Cable Assembly

Probe Housings with Custom Termination

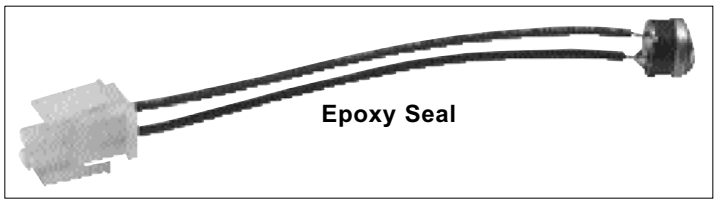

Epoxy Seal

Epoxy Overmold

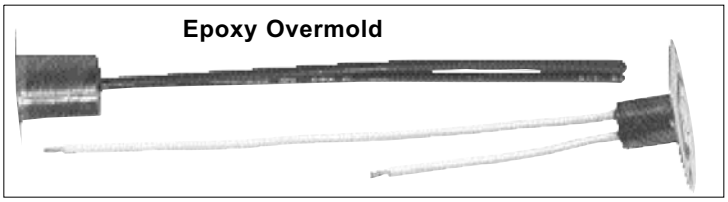

It is the customer's sole responsibility to specify and determine the suitability of a particular control or component based on their unique individual applications and requirements

(714) 917-1333 • (800) 257-3526 • FAX (714) 917-1355 • E-mail: sales@selcoproducts.com

NTC Thermistors

Selco's line of high-quality, high-performance thermistors includes negative (NTC) temperature coefficients offering a complete selection from interchangeable, point matched, surface mount, and thin film models to life sciences probes as small as 0.019" in diameter. In addition, Selco can address custom applications with virtually unlimited options in materials, configurations, leads, and connections.

The complete selection of NTC thermistors offered by Selco include:

Interchangeable (IN Series)
- Small size with ease of handling
- High accuracy tolerances to ±0.10°C
- Operating ranges from -50°C to 150°C

Point Matched (PM Series)
- ±1% to ±10% tolerances
- Reduced cost for high volume applications
- Tolerance resistance matched to specific temperature

Custom (CS Series)
- Customer specified
- Various material options
- Modified stock or new custom designs

High Precision (HP Series)
- Low cost, high quality
- Excellent thermal cycle endurance
- No adjust between the control circuit and the sensor

Thin Film (TF Series)
- Rapid response time
- Elastic and solder easily
- Suitable for narrow space

Surface Mount Chip (SM Series)
- Surface mount capability
- Ultra small size and low capacitance
- Uniformly sized for pick and place assembly

Life Sciences Temperature Probes (LS Series)
- Custom designs at low cost
- Skin and catheter disposable sensor designs
- Compatible with YSI 400 and 700 temperature monitor instruments

Life Sciences & Miniature Temperature Probes (LSMN Series)
0.035" and 0.055" maximum diameter
- Fast response accuracy to ±0.1°C
- Potted with epoxy in a polyimide tube
- Compatible with YSI 400 and 700 temperature monitor instruments

Life Sciences & Micro Temperature Probes (LSMC Series)
0.0185" and 0.0190" maximum diameter - capability to .0175" dia.
- Fast response accuracy to ±0.1°C
- Potted with epoxy in a polyimide tube
- Compatible with YSI 400 and 700 temperature monitor instruments

Custom Probes (CP Series)
- Virtually unlimited options
- Customer specification or made from stock materials

It is the customer's sole responsibility to specify and determine the suitability of a particular control or component based on their unique individual applications and requirements

(714) 917-1333 • (800) 257-3526 • FAX (714) 917-1355 • E-mail: sales@selcoproducts.com

Cold/Hot Temperature Controllers

Models 2698/2699

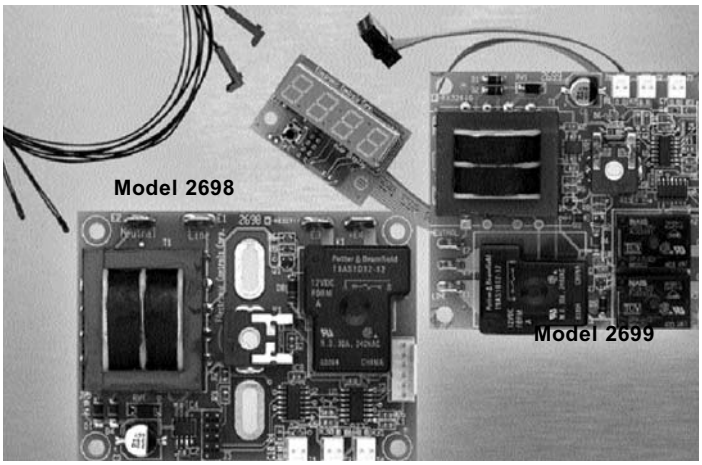

FEATURES

- Class 2 Isolation
- Microprocessor control
- UL approved file #: E230832
- Optional external switch input
- Conformal coating for operation in moist environments
- Optional expansion connector to support a remote digital display/user panel

Selco/ECC Model 2698/2699 Cold/Hot Controllers offer high-end electronic features to provide extremely sophisticated sensing and control of heating, cooling, and humidity. Typical applications include cooling and heating controls for cooking equipment, freezers, refrigerators, and dehumidifiers.

The electronic controllers feature a number of enhanced control options including two or four-digit push-button display panels and bi-color LED indication. Incorporating microprocessor-based technology, the controllers provide excellent performance accuracy, repeatability, and stability.

For maximum versatility, users can select from power input options of 115 VAC or 230 VAC, with Class 2 Isolation Transformer. Further flexibility is provided via the onboard POT or connector that can optionally be used with input signals such as humidity, pressure, or other.

Model 2699 has all the same features as Model 2698, however, includes up to three outputs and onboard bi-color LED indicator. The additional outputs can be programmed to drive a fan, lights, damper, heater, or compressor.

Both models have been designed for ON/OFF cooling control for temperature between -40°F to +100°F (-40°C to +24°C), or heating control for temperatures between 0°F to 285°F (-170°C to 140°C). Our library of tested application software helps us respond quickly to your requests for testing samples. Please contact us with your control needs.

SPECIFICATIONS

MODEL 2698	
Inputs	
Power	Standard Transformer 115 or 230 VAC (factory settable) Class 2 Isolation Transformer - 2.4VA
Signal	Two thermistors maximum Optional external switch input Onboard POT or connector for external POT
Outputs	
Power	One 30A SPST or SPDT Relay
Signal	Optional connector to support remote digital display or user panel
Controls	Onboard potentiometer used for setpoint adjustment or adjustment on user panel
Environment	Operational temperature range: 0ºF to 140ºF Conformal coated
Mechanical	PCB size: 3.40” L x 2.55” W
Compatible User/ Display Panels	Four digits/one push-button display panel (ECC part number: 399-0643) Four digits/five push-buttons, 6 LED user panel (ECC part number: 399-0644) Two digits/four push-buttons, 4 LED user panel (ECC part number: 399-0646)
MODEL 2699	
Inputs	
Power	Standard Transformer 115 or 230 VAC (factory settable) Class 2 Isolation Transformer - 2.4VA or 6VA
Signal	Two thermistors maximum Optional external switch Onboard POT or connector for external POT
Outputs	
Power	Output 1: 30A SPST relay Output 2: 7A or 10A SPST relay Output 3: 7A or 10A SPST relay
Controls	Onboard potentiometer used for setpoint adjustment or adjustment on user panel
Indicators	Optional onboard bi-color LED indicator
Environment	Operational temperature range: 0ºF to 140ºF Conformal coated
Mechanical	PCB size: 3.40” L x 3.10” W
Compatible User/ Display Panels	Four digits/one push-button display panel (ECC part number: 399-0643) Four digits/five push-buttons, 6 LED user panel (ECC part number: 399-0644) Two digits/four push-buttons, 4 LED user panel (ECC part number: 399-0646)

MADE IN THE USA

It is the customer’s sole responsibility to specify and determine the suitability of a particular control or component based on their unique individual applications and requirements

(714) 917-1333 • (800) 257-3526 • FAX (714) 917-1355 • E-mail: sales@selcoproducts.com

Feature Configuration Module

Compatible With Models 2698/2699

MADE IN THE USA

The FCM (Feature Configuration Module) offers original equipment manufacturers the ability to inventory one controller that is capable of controlling different model appliances that they manufacture. The FCM connects to the controller and communicates with the processor to select configuration data from a pre-established list of parameters and parameter values in the software. The software developed by Selco/ECC would be designed with different temperature, timing, and switching parameters that the manufacturer could select according to the requirements and application of the particular model appliance.

These parameters could allow selection of:

ASC lockout times
Minimum-run times
Temperature offsets
Temperature differentials
Fixed defrost cycle times
Different temperature ranges
Enable or disable defrost heater
Enable or disable a defrost cycle
Enable or disable evaporating fan
Adjustable or fixed temperature range
Maximum duration of defrost cycle
Temperature display scale - Fahrenheit or Celsius

Contact Selco/ECC to discuss your specific requirements.

It is the customer's sole responsibility to specify and determine the suitability of a particular control or component based on their unique individual applications and requirements

(714) 917-1333 • (800) 257-3526 • FAX (714) 917-1355 • E-mail: sales@selcoproducts.com

Digital Temperature & Time Controller

Model 2901A

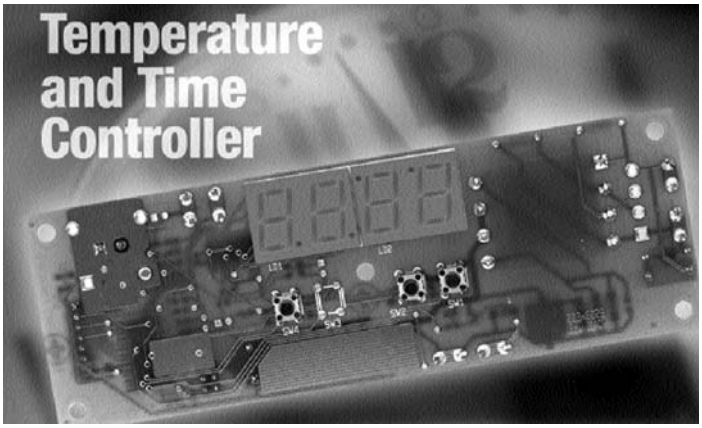

FEATURES

- Microprocessor control
- UL approved file #: E230832
- LED display of time and temperature
- Temperature setpoint differential adjustable from 1 to 10 degrees
- All operating mode selections and parameter settings can be set from the front panel
- Multiple modes of operation for timer only or temperature and time controller

BENEFITS

- Solid state relay output
- Easy-to-use and program
- A variety of input voltages

Model 2901A Digital Temperature and Time Controller features digital sensing and microprocessor-based solid-state technology for reliability and accuracy. Offering a broad temperature control range from 40ºF to 999ºF (4ºC to 530ºC), the controller can be used for a wide variety of commercial food equipment and industrial control applications.

Five operating modes provide the user with a great degree of flexibility from the time only control or simultaneous temperature and time control. Depending on the mode selected, users can program for simple on/off temperature/time control, cook/heat and setback temperatures, or hold and cooking/heating temperatures. All operating mode selections and parameters are easily set from the front panel for optimum user convenience.

The 2901A Controllers allows user selection of type “J” (±5ºF accuracy) or “K” (±1.8ºF accuracy) thermocouple sensors and user-selectable temperature readings in ºF or ºC. Temperature setpoint differential is adjustable from 1 to 10 degrees. Power options include choice of Selco/ECC’s Solid State Transformer that automatically adjusts to line inputs from 75 to 305 VAC; 50/60Hz, or Standard Transformer input of 115/230VAC, 50/60Hz.

The 2901A features a 0.56-inch, four-digit LED display for easy readability of temperature and time indication and measures 6.2” L x 2.1” W. UL approved file #: E230832.

SPECIFICATIONS

Input	
Power	Standard Transformer 115/230VAC; 50/60Hz Uses 0 Ω jumpers (factory set)
Sensors	Thermocouple - one input maximum Types “J” or “K” - connected by two screw terminal blocks “J” Type temperature range: 200ºF to 450ºF; ±5ºF accuracy “K” Type temperature range: 200ºF to 450ºF; ±1.8ºF accuracy “K” Type temperature range: 40ºF to 999ºF; TBD accuracy
External	Two 1/4” quick connect terminals for START switch at E1 & E2 (closure to ground)
Outputs	Drive for off-board 12V SSR Audible (onboard) beeper
Controls	Standard controls consist of three pushbutton switches (MODE/SET, DOWN, and UP). An optional fourth pushbutton can be implemented for various applications.
Indicators	4 seven segment LED displays
Environment	Operational temperature range: 0º to 158ºF
Factory Options	Miniature iso-therm connector instead of two screw terminal blocks for thermocouple

ORDERING MAP

2901A - X 0 0 0

Input Voltage Options

1 = 115VAC; 50/60Hz
2 = 230VAC; 50/60Hz
3 = 208VAC; 50/60Hz
4 = User Selectable - Standard Transformer 115/230VAC; 50/60Hz
5 = 12-24VAC/VDC; 50/60Hz”

Recommended SSR External Output Device

Description	Selco/ECC Part #
10 Amps with .250 quick connects	1310-0110
30 Amps with .250 quick connects	1310-0130
10 Amps with screw terminals	1310-0210
30 Amps with screw terminals	1310-0230

MADE IN THE USA

It is the customer’s sole responsibility to specify and determine the suitability of a particular control or component based on their unique individual applications and requirements

(714) 917-1333 • (800) 257-3526 • FAX (714) 917-1355 • E-mail: sales@selcoproducts.com

Cost-Effective Microprocessor Controlled Timer

Model 2830

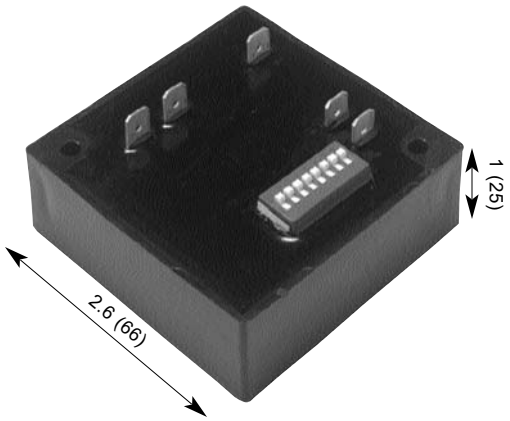

FEATURES

- Choice of 1-63 seconds or 1-63 minutes
- Times selected with 8 position dip switch
- Microprocessor controlled digital timer module
- Functions as One-Shot Output On-Make or Delayed Output On-Make

BENEFITS

- 10 Amp solid state output
- Highly accurate and stable
- 1 minute/second selection resolution

Selco/ECC Model 2830 Digital Timer is a One-Shot or Delay On-Make timer with a built-in SSR solid state output. There are two settings allotting timing ranges from 1 to 63 minutes, and from 1 to 63 seconds. Contact Selco/ECC for further application requirements.

SPECIFICATIONS

Input Power	115VAC; 50/60Hz
Input/Output Power Connections	.250 quick connect line (quantity 3) Labeled “Load”, “Neutral” and “Line”
Outputs	Load, 10 Amps at 115VAC
Timing Range	1 to 63 seconds; or 1-63 minutes
Timing Resolution	1 second; or 1 minute
Timing Repeatability	1%
Mechanical	Overall dimensions: 2.6” W x 2.6” L x 1” D Metal bottom plate mounts to heat dissipation surface
Maximum Operating Environmental Temperature	+30ºF to 158ºF; 0 to 90%RH, non-condensing
Timer Functions	One-Shot: The output is activated (on) for the selected time period beginning when power is applied. At then end of the time period, the output is switched off.
	Delay-On Make: The output is (off) for the selected time period beginning when power is applied. At the end of the time period, the out put is switched on and stays on.
Part Number	2830-1

MADE IN THE USA

It is the customer’s sole responsibility to specify and determine the suitability of a particular control or component based on their unique individual applications and requirements

(714) 917-1333 • (800) 257-3526 • FAX (714) 917-1355 • E-mail: sales@selcoproducts.com

Programmable Timer
Model 2831

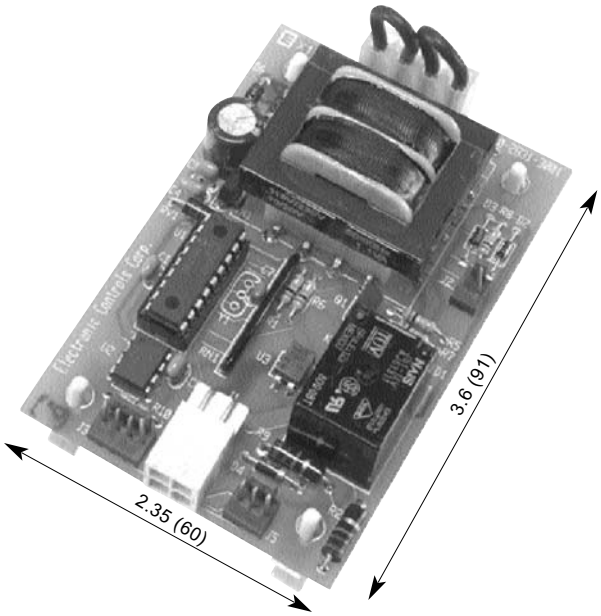

BENEFITS
- Easy-to-use and program
- Dual range programmable timer
- Optional indicating panel mount LED
- A variety of power inputs and outputs
- Maintains memory (time is saved during power loss)

FEATURES
- UL approved file #: E70766
- Dual teachable time settings
- Time setting is done by example
- Ideal for timed food or liquid dispensing
  Application examples: coffee brewing, cheese and chemical dispensing
- Optional flowmeter support for volume instead of time mode
- Two different start modes, (Isolated) AC activation or panel push button

Model 2831 is a dual range timer and is also designed to be a plug-in replacement for Model 2577 Teachme Timer. Both timing ranges are programmed by example. For instance, if you are filling a glass with liquid, just fill the glass once while in program mode, and the time will be remembered (even if power is removed) until it is reprogrammed. An optional panel mount LED indicates that dispensing is in progress. The start button can either be connected to the AC line for 110/220 VAC activation or if low voltage is desired, the button can be connected straight to the board.

SPECIFICATIONS

Input Power	Selection either by fixed factory setting or jumper selectable field setting
Input/Output Power Connections	Amp Part #: 770968-1, Type 4 pin PCB mount connector (Amp Mating Plug #: 172167-1, Pins #: 77098-1)
Input Signals	AC start, cycle select, program, alternate start
Input Signal Connections	0.1” Molex IDC type 4 pin connector
Outputs	Connects up to 10A load to input power
Control Logic	Two separately teachable timers with one start switch and one timing select switch
Timing Range	0.050 seconds to 54 minutes Other timing ranges available
Timing Resolution	0.050 seconds
Timing Repeatability	1%
Mechanical	Overall dimensions: 2.35” W x 3.6” L x 1.5” D Four standoffs are included to mount in 0.156” mounting holes. Mounting footprint is for 1.75” x 3.0” mounting dimensions.
Maximum Operating Environmental Temperature	+30ºF to 158ºF; 0 to 90%RH, non-condensing
Options	Conformal coating

ORDERING MAP

2831 - X X X X

Input Voltage Options
1 = 115VAC; 50/60Hz
2 = 230VAC; 50/60Hz
3 = 208VAC; 50/60Hz
4 = User Selectable - 115/230VAC; 50/60Hz
5 = 24VAC/VDC

Output Connection
0 = SSR output
1 = Relay output committed to input voltage connection

Output Type
1 = 10 Amps Electromechanical (SPDT)*
4 = 1 Amp onboard SSR**

Control Type
1 = Standard time
2 = Pulse - type flowmeter

* Maximum DC switching voltage 100VDC at 5 Amps
** 6 Amps maximum or 1 Amp average current

MADE IN THE USA

It is the customer’s sole responsibility to specify and determine the suitability of a particular control or component based on their unique individual applications and requirements

(714) 917-1333 • (800) 257-3526 • FAX (714) 917-1355 • E-mail: sales@selcoproducts.com

Solid State Transformer "SST"

Model 399-0642

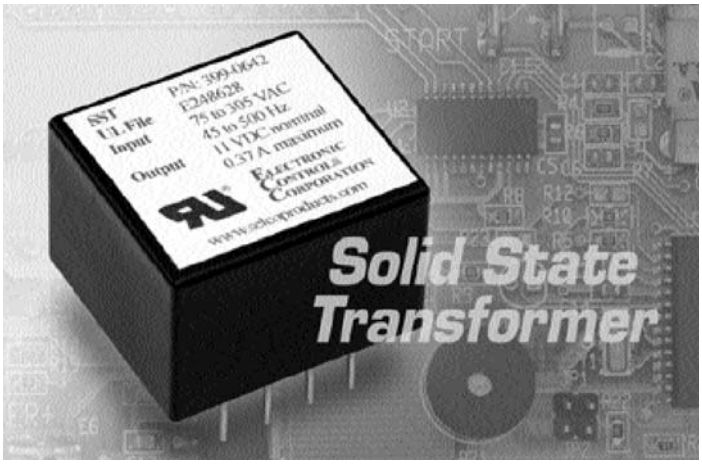

"Solid State Transformer" (SST) Model 399-0642 designed to replace conventional linear transformers with a highly efficient switching power supply. The SST fits a PC Board transformer footprint and accepts a wide input voltage range of 75 to 305 VAC at up to 500 Hz, offering users optimum flexibility over a wide range of applications.

OEM's can now reduce product inventory and associated costs by stocking a single item that will work at multiple input voltage ratings. Additionally, using the SST in new product designs eliminates the need for the input voltage range management and can reduce inventory of the finished good.

Featuring high energy efficiency, the SST uses much less power at no load than conventional transformers, and provides energy savings and an improved safe-guard against brown-outs. Over the input range from 75 to 305 VAC, the SST gives a consistent output of 11VDC nominal at up to 0.37 Amps. With worldwide voltage capabilities, it can be used for virtually any industrial control equipment where a transformer or power supply is required.

The SST is fully enclosed in a 1.40-inch by 1.50-inch industry-standard package. Industry-standard size makes it easy to replace an existing transformer and remove a separate power supply, freeing up crowded PC Board real estate. The device weighs just 1.7 oz., which reduces shipping costs to the overall end product.

Agency approvals include UL File #: E248628 and UL 508 standard.

FEATURES

- UL 508 Standard
- UL approved file #: E248628
- Outputs are short circuit protected

Inputs

- 75 to 305 VAC
- 45 to 500 Hz

Outputs

- 11VDC nominal
- 0.37 Amp maximum

DIMENSIONS

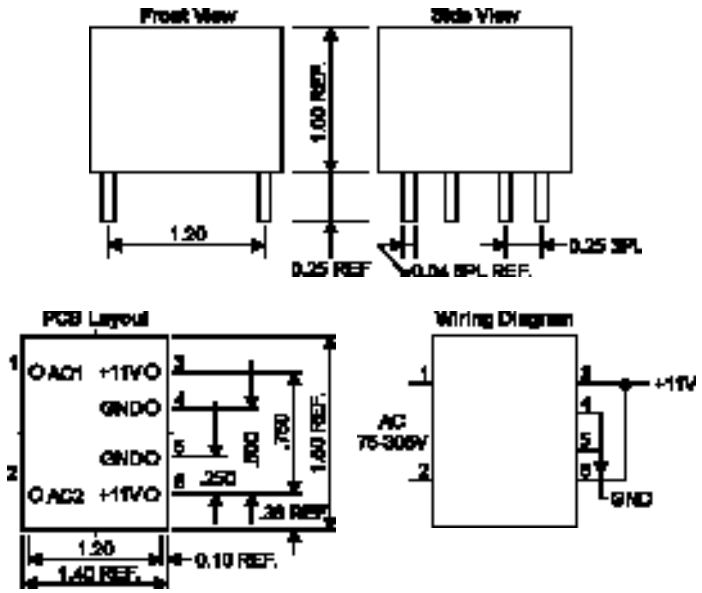

MADE IN THE USA

It is the customer's sole responsibility to specify and determine the suitability of a particular control or component based on their unique individual applications and requirements

(714) 917-1333 • (800) 257-3526 • FAX (714) 917-1355 • E-mail: sales@selcoproducts.com

Digital Programmable Time Delay Relay

Model PET 1481

Selco/ECC's PET 1481 Programmable Electronic Timer has been designed to provide exceptional control versatility offering the user full programmability of both operating control mode and time delay period. Programming is achieved before or after installation by setting switches on a conveniently located 8 position, digital (DIP) switch and by fine tuning with the external potentiometer knob.

Standardizing on this one versatile timer, the user can stock a single part that can handle all time delay control functions. Conversion from a Delay-On-Operate to Interval-On (or any of the 5-modes of operation shown) can be accomplished in a few seconds, without unplugging the unit and with no special tools.

By programming the 8-position DIP switch there are 62 possible combinations of the timing range. By turning on switch position #8 only, for example, the timing range would be set at .3 to 2.75 seconds. With all switch positions ON, the range is 1457 seconds to 8060 seconds. An instruction sheet, packaged with each unit, shows typical ranges and how to set additional ranges to maximize your actual application.

The PET 1481 uses a special P-MOS digital timing IC combined with other advanced circuitry to provide exceptional accuracy and long life. The output device is a standard hi-rel, DPDT enclosed relay with proven mechanical life in excess of 10 million cycles.

FEATURES

- UL approved file #: E70766
- Outstanding repeatability - less than ±1%
- Industry standard radio type, 11-pin socket
- High accuracy P-MOS digital timing network
- Field programmable for any of 5 operating modes
- Long life, double pole double throw 10 Amp contacts
- Field selectable time delays from .3 seconds to 2.2 hours

DIMENSIONS

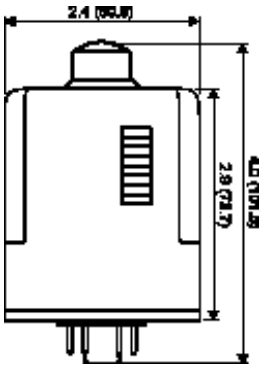

SCHEMATIC

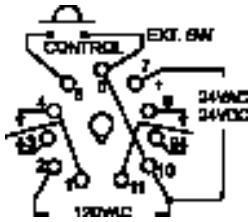

SPECIFICATIONS

Temperature Range	14ºF to 131ºF (-10ºC to 55ºC)
Time Delay	
Operating Models (Selectable)	Delay-On Operate Delay-On Release ON Oper./ON Rel. Interval ON One Shot
Timing Adjustment	Single turn pot with knob on top of case
Timing Range (Selectable)	0.3 - 8060 seconds
Repeat Accuracy	±1% under fixed conditions
Absolute Accuracy over complete range of temperature and input voltage	±5%
Reset Time	10m seconds maximum-signal interrupt 100m seconds maximum-power interrupt
Input	
Voltage Range (Selectable)	24Vdc/VAC and/or 120VAC
Allowable Variation	±10%
Power Consumption	1.5 Watts maximum
Output	
Type	DPDT relay
Rating	10 Amps at 30Vdc resistive 10 Amps at 120 and 240 VAC, 1/3HP at 120VAC
Life Expectancy	1,000,000 cycles minimum under rated load
Transient Protection	0.8 Joules
Termination	11-pin plug-in octal socket
Weight	5 ounces
Options	12Vdc input voltage .187" tab terminals 8-pin octal socket (SPDT output)

MADE IN THE USA

It is the customer's sole responsibility to specify and determine the suitability of a particular control or component based on their unique individual applications and requirements

(714) 917-1333 • (800) 257-3526 • FAX (714) 917-1355 • E-mail: sales@selcoproducts.com

Digital Programmable Time Delay Relay

Model PET 1481

OPERATING MODES

Delay-On Operate - Upon application of power to the input terminals, the time delay is initiated. At the end of the time delay period, the output contacts transfer. Reset is accomplished by removal of input power.

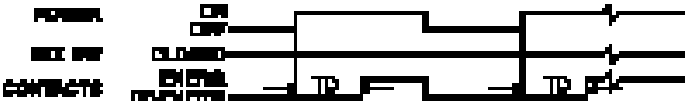

Delay-On Release - Power is applied at all times. Upon application of a signal voltage, the output contacts immediately transfer and remain in this position if no further action is taken. Immediately upon removal of the signal voltage, the time delay begins. At the end of the preset time delay, the output reverts to its original position and the unit is now ready for the next cycle.

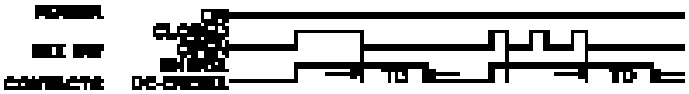

Interval-On - Upon application of power to the input terminals, the output contacts transfer immediately and the timing period begins. At the completion of the preselected time delay, the output contacts de-energize. Reset is accomplished by removal of the input power.

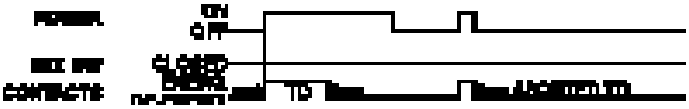

One-Shot - Closing the external switch energizes the internal relay and starts a time delay at the conclusion of which the internal relay de-energizes. If the external switch is opened and reclosed during a timing cycle, a fresh delay is initiated at the conclusion of which the internal relay de-energizes.

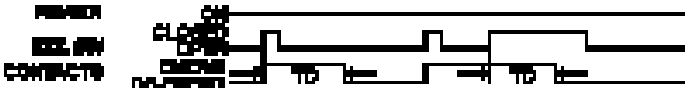

Delay-On Operate / Delay-On Release - Closing the external switch will initiate a delay on operate (internal relay will energize after set delay period). The internal relay will remain energized as long as the external switch remains closed. Upon opening the external switch a delay on release is started (same delay time as on operate) and at the conclusion of the delay period the internal relay de-energizes and is ready for re-cycle. The above delay cycles may be aborted by removing input power.

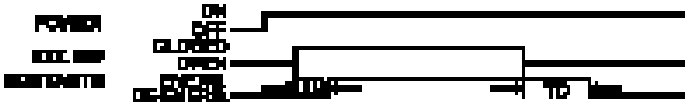

It is the customer's sole responsibility to specify and determine the suitability of a particular control or component based on their unique individual applications and requirements

(714) 917-1333 • (800) 257-3526 • FAX (714) 917-1355 • E-mail: sales@selcoproducts.com

Programmable Countdown Timer

CDT-2000

FEATURES

- 4-digit display
- 90+ db beeper
- 2-memory settings
- Standard DIN cutout (72mm)
- UL recognized and CSA certified
- 120 VAC operation; 50/60Hz
- Remote input with interlock capability
- Minutes & seconds or hours & minutes

Selco/ECC's CDT Series (part number: 8322-2398-2000) has been designed to be panel mounted through a 72mm-square DIN cutout. All connections are via the back of the unit by way of 1/4" male quick connect terminals.

The increment/decrement interval, beeper loudness, beeper enable/disable, and 3-modes of remote operation are all easily programmable by the user. Large numerals and finger size membrane switches make this timer especially simple to use. The rear panel is labeled with an easy to read diagram of the power in, relay out, and remote input terminal connections.

A separate, U-shaped, mounting bracket (not shown) is attached to the back of unit and holds the timer firmly in place. The bracket accommodates any panel thickness between 1/16" and 1/4".

SPECIFICATIONS

Unit Type	Programmable count down timer with alarm
Temperature Range	0ºF to 150ºF
Operating Voltage	120VAC at 50/60Hz
Mounting	DIN, 72mm-square
Terminations	1/4" quick connect terminals
Readout	4-digit, .56 high
Timing Range	99 hours in hours and minutes OR 99 minutes in minutes and seconds
Size	3.17" x 3.17" x 4.75" overall (80.5mm x 80.5mm x 120.7mm)
Weight	Approximately 10 oz.
Warranty	One year
Approvals	UL (UL File #: E174510) CSA

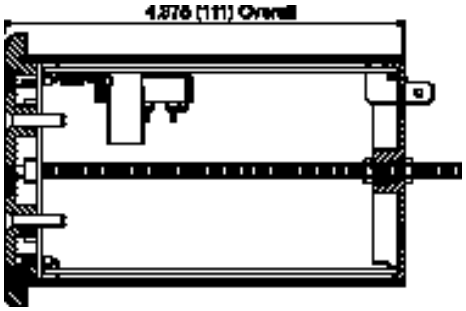

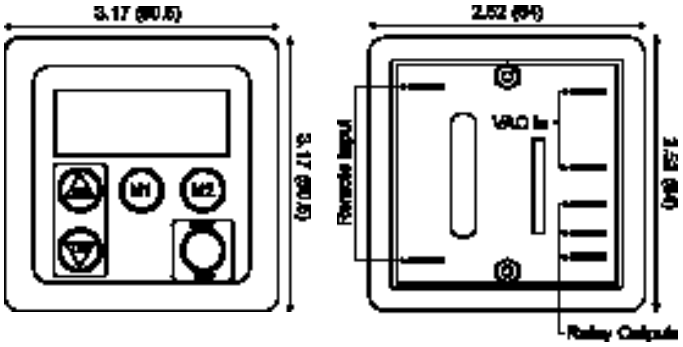

MADE IN THE USA

It is the customer's sole responsibility to specify and determine the suitability of a particular control or component based on their unique individual applications and requirements

(714) 917-1333 • (800) 257-3526 • FAX (714) 917-1355 • E-mail: sales@selcoproducts.com

Glossary of Terms

Air mount: Designed to sense the air temperature

Ambient temperature: The surrounding temperature or environmental temperature

Automatic reset: A type of thermostat that will reset itself at a specific temperature (set point - differential = reset temperature)

Bimetal: Two different metals that bond together to form the disc that actuates the thermostat when reaching a specified temperature

Close on-rise: Normally open contacts; when the temperature rises to the specified temperature the contacts close

Contact resistance: The resistance measured in ohms from across the circuit

Dielectric strength: The voltage that an insulating material can withstand before breakdown occurs

Differential: The difference between opening and closing temperatures - also known as the hysteresis

Electrical contact rating: The maximum volts and amps that the device has been tested to withstand

Exposure temperature: Thermal environment a device will see during application operation

Epoxy seal: A seal to protect against dust and moisture

Insulation resistance: Measures the resistance of the insulating member of the device to a direct voltage

FLA (Full load amps): The amount of current a motor will pull in a locked condition

Life cycles: The endurance rating of a device expressed in number of operations with stated electrical load applied

LRA (Locked rotor amps): The amount of current a motor will pull in a locked condition

Manual reset: The thermostat will remain open until it resets manually - also known as a high limit

Open on-rise: Normally closed contacts; when the temperature rises to the specified temperature the contacts open

PBT: Polybutylene Terphtalate

Phenolic: An insulating thermo-set plastic used for the body of specific thermostats

Set point: Operating temperature; temperature at which the disc changes its curvature (snaps) to open or close electrical contacts

SPST (Single pole, single throw): One set of terminals to activate or deactivate a circuit

SPDT (Single pole, double throw): An electrical switch capable of controlling two different circuits

Snap-action: Fast sudden change in temperature that will cause the bimetal to snap

Surface mount: Designed to sense temperature of the surface as opposed to the air temperature

Tolerance: An additional range above or below the nominal set point

(714) 917-1333 • (800) 257-3526 • FAX (714) 917-1355 • E-mail: sales@selcoproducts.com

Terms and Conditions

Warranty
One year on most products. Seller extends the same warranties to buyer as the manufacturer extends to seller. All other warranties, whether expressed or implied, are hereby disclaimed except as set forth herein. It is the buyer's sole responsibility to specify and determine the suitability of a particular control or component based on their unique individual applications and requirements.

Damages and Shortages
Inspect immediately for damages and shortages upon receipt of merchandise. All claims for shortage, damage or shipment error must be made within 14 days of receipt.

Payment Terms
Selco accepts Visa, Mastercard, American Express, C.O.D., or Net 30 on approved credit.

Returns
No returns will be accepted without seller's prior authorization. Please contact a Selco sales representative for documentation authorizing each return and include a copy with the returned product. Returns should include P.O. number, invoice number and explanation for return. All returns must be freight prepaid unless authorized by Selco. All authorized returns are subject to a restocking charge. Credit will be issued only after receipt and examination of returned merchandise. Replacement merchandise will be sent out and invoiced as a new order. Any credit due will be issued against the old invoice.

Minimum Orders
Minimum order of $50.00 for single shipment orders and $100.00 on blanket (multiple shipments) orders.

Contact Selco for distributors or representation in your area

Selco Products Company
605 South East Street • Anaheim, CA 92805-4842
(800) 229-2332 • (714) 917-1333 • FAX (714) 917-1355
www.selcoproducts.com • E-mail: sales@selcoproducts.com