THIS COPY IS PROVIDED ON A RESTRICTED BASIS AND IS NOT TO BE USED IN ANY WAY DETRIMENTAL TO THE INTERESTS OF PANDUIT CORP.

PANDUIT PART NO.	PKG.QTY.	CTN.QTY.	TAPE MATERIAL	"W" (WIDTH)	"T" (THICKNESS)	ROLL LENGTH
META-X	10 ROLLS	40 ROLLS	ALUMINUM	.495"±.010" [12.6±.25]	.006"±.0005" [.15±.01]	16 ft. 4.88 meters
METS4-X	10 ROLLS	40 ROLLS	304 GRADE STAINLESS STEEL	.495"±.010" [12.6±.25]	.005"±.0005 [.12±.01]	21 ft. 6.4 meters
METS3-X	10 ROLLS	40 ROLLS	316 GRADE STAINLESS STEEL	.495"±.010" [12.6±.25]	.005"±.0005 [.12±.01]	21 ft. 6.4 meters

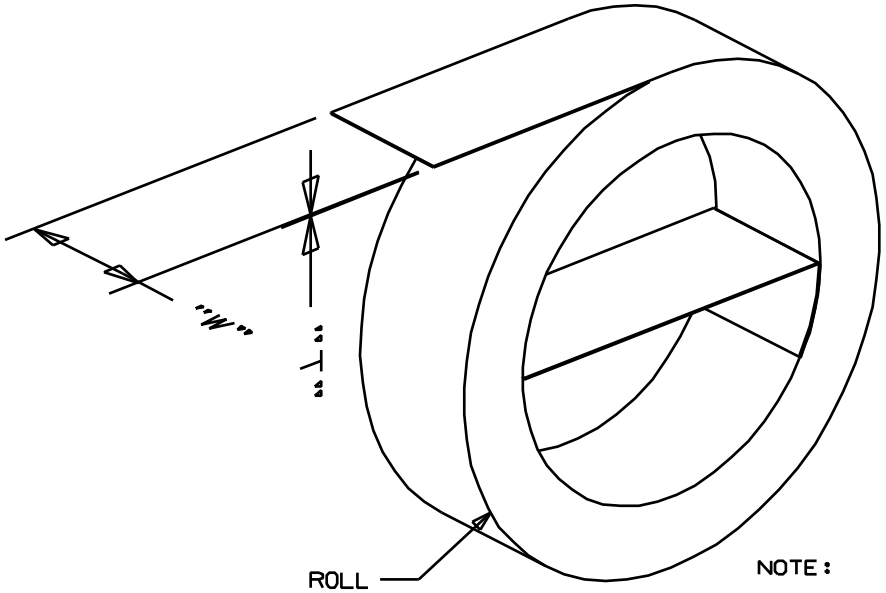

NOTE:

1. TAPE USED WITH PANDUIT EMBOSSING TOOL PART NO.MEHT.
1. [ ] BRACKETS DENOTES DIMENSION IN MILLIMETERS.

S41206_01

REV	DATE	BY	CHK	DESCRIPTION	ECN #	PM	CUST
01	06/06	MIM	SKB	REVISED WIDTH DIMENSION	SS00189	CCH	JJB
00	12/04	JMMR	EJD	DRAWING RELEASED	12339	CCH	JJB

PANDUIT CORP. TINLEY PARK, ILLINOIS

ACCESSORY TAPE FOR MEHT
PANDUIT EMBOSSING TOOL

DRAWN BY	CHK'D	SCALE	DRAWING NO.
JAMB	EJD	4x	S41206