PIN RECEPTACLES
for .015" - .020" diameter pins (#11 contact) and .015" - .022" diameter pins (#21 contact) (see specific contact range on page 217)

0548

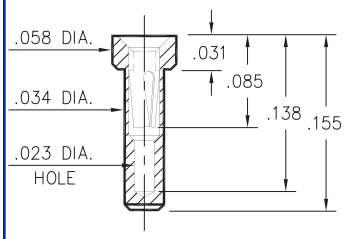

0548-0-15-XX-21-XX-10-0
Solder mount in .036 min. mounting hole

8975

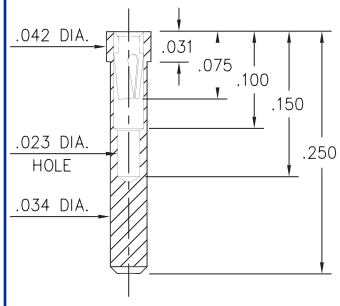

8975-0-15-XX-21-XX-10-0
Solder mount in .036 min. mounting hole

3016

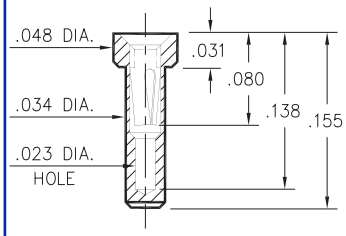

3016-0-15-XX-21-XX-10-0
Solder mount in .036 min. mounting hole

9548

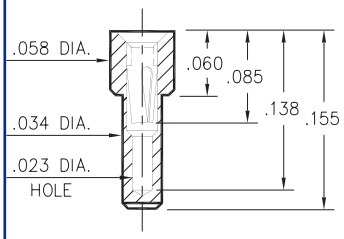

9548-0-15-XX-21-XX-10-0
Solder mount in .036 min. mounting hole

8637

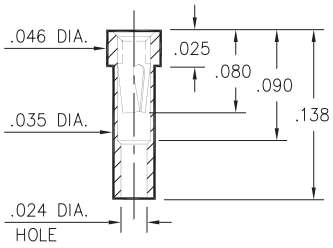

8637-0-15-XX-21-XX-10-0
Solder mount in .037 min. mounting hole

1407

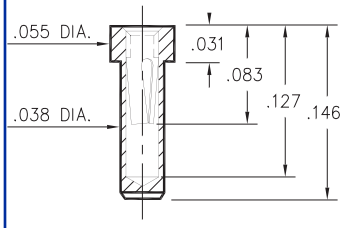

1407-0-15-XX-11-XX-10-0
Solder mount in .040 min. mounting hole

0553/8553

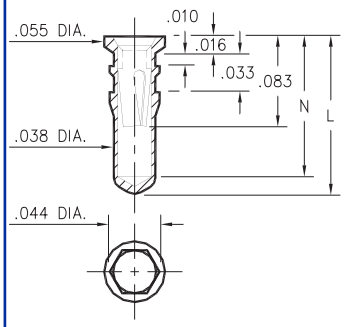

Basic Part Number	Length L	Depth N
0553-1	.140	.124
0553-2	.170	.154
0553-3	.282	.266
8553-0	.245	.229

X553-X-15-XX-X1-XX-10-0
Hex press-fit in .041 plated thru hole

0566

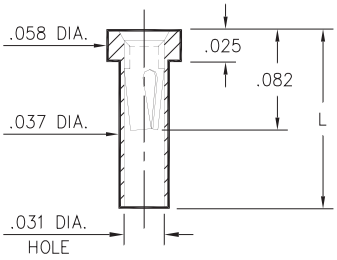

Basic Part Number	Length L
0566-1	.083
0566-2	.138

0566-X-15-XX-21-XX-10-0
Solder mount in .039 min. mounting hole

0442

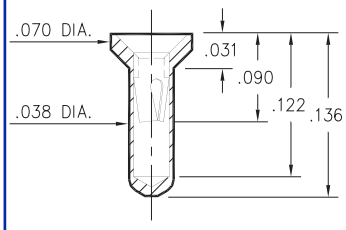

0442-0-15-XX-11-XX-10-0
Solder mount in .040 min. mounting hole

0554

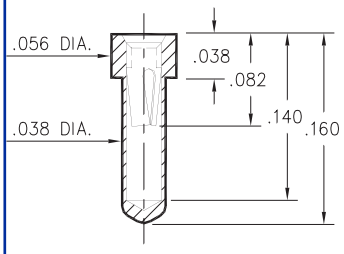

0554-0-15-XX-21-XX-10-0
Solder mount in .040 min. mounting hole

SPECIFICATIONS

SHELL MATERIAL:
Brass Alloy 360, 1/2 Hard

CONTACT MATERIAL:
Beryllium Copper Alloy 172, HT

DIMENSION IN INCHES
TOLERANCES ON:
LENGTHS: ±.005
DIAMETERS: ±.002
ANGLES: ± 2°

ORDER CODE: XXXX - X - 15 - XX - XX - XX - 10 - 0

BASIC PART #

SPECIFY SHELL FINISH:
01 200μ" TIN/LEAD OVER NICKEL
80 200μ" TIN OVER NICKEL ◇
15 10μ" GOLD OVER NICKEL ◇

SPECIFY CONTACT FINISH:
02 100μ" TIN/LEAD OVER NICKEL
84 100μ" TIN OVER NICKEL ◇
27 30μ" GOLD OVER NICKEL ◇

RoHS 2002/95/EC

SELECT CONTACT
#11 or #21 CONTACT (DATA ON PAGE 217)