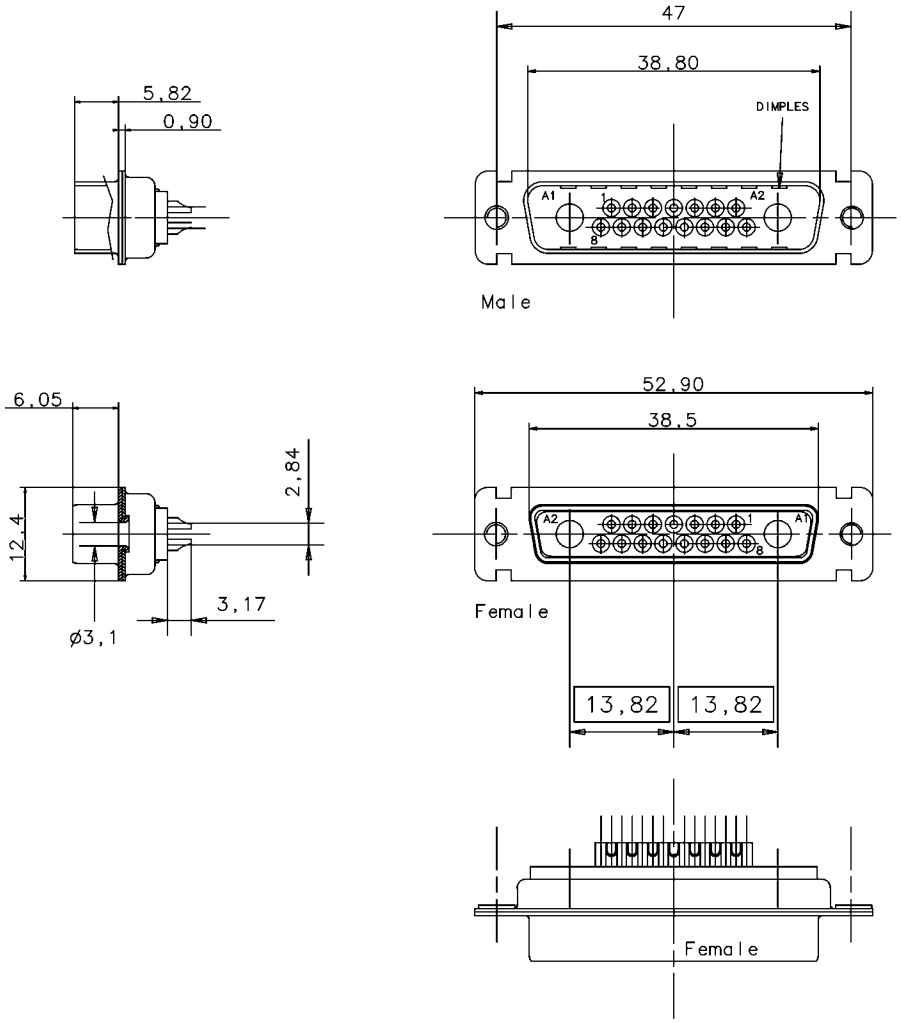

TECHNICAL DATA

'' D '' SUBMINIATURE CONNECTORS

SHELL : Steel .
finish : tinned

BODY : Glass filled thermoplastic .
Flame retardant to UL 94 V-0 .
(resist to short term temperature 260°C)
Colour : black .

CONTACTS : Material for sockets : bronze
Material for pins brass
Finish of contact mating area :
15 um inch. (0,4 um) Gold over Nickel

ELECTRICAL Voltage proof 300 V Rms to 50Hz .
Nominal current 7,5 A (size20) 40 A (size 8)
Voltage proof >1000 V Rms to 50 Hz
Contact resistance <5m Ohms .
Insulator resistance >5000 M Ohms.

CLIMATIC Temperature range -55°C up to 155°C
Damp heart 56 days (40°C - 95 % RH)
Other climatic specifications in accordance
with NF C 93-425, sheet HE507

MECHANICAL Insertion force per contact 1,2N < F <2,5 N (size 20)
Extraction force per contact 0,4 N mini (size 20)
Mating and unmating force size B 100N maxi 8N mini

MARKING Amphenol - ....(serie number)
Commercial reference
Manufacturing date

COAXIAL Teflon insulator ,
Outer spring contact in beryllium copper.
Metallic parts gold plated.

IMPEDANCE To be used at 50 ohms

L 77TW B 17W2 S

L = RoHS

77TW Tinned Shell
717TW Tinned shell with dimples
Monobloc dielectric

Shell size : B

Configuration :
2 cavities size 8
15 cavities size 20

Options:

Contact type : P = male
: S = female

Amphenol Socapex
Usine de Dole

ECHELLE : 2

IND.	MODIFICATION	DATE	Execut	Approb
A	Creation plan	23/03/06	Vallot	

PLAN NOTICE

DOSSIER:notices-17V

N SERIE 017F

DESIGNATION L**7TWB17W2*

COMMUNICATION ET UTILISATION INTERDITES SAUF AUTORISATION

N CLIENT
N OUTIL
N ETUDE
DATE DU TIRAGE

17TW