REV.	DATE	DESCRIPTION
A	04/11/03	MODIFY PLATING SPECS. / UPDATE DRAWING FORMAT
B	01/30/04	MODIFY CONTACT PIN AND INSULATOR

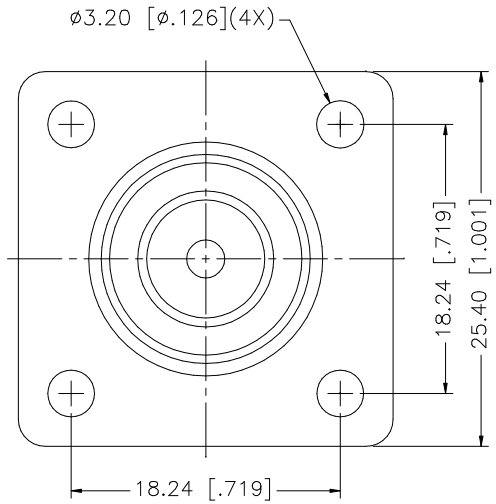

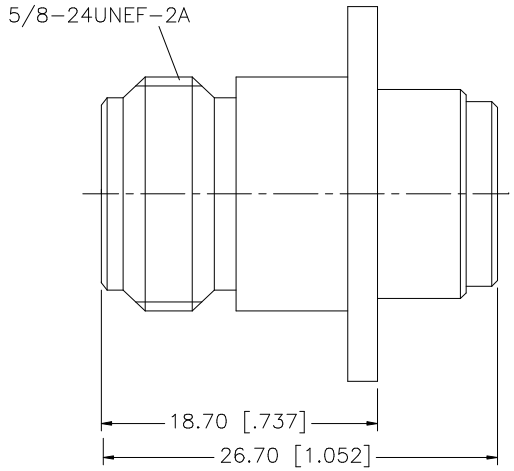

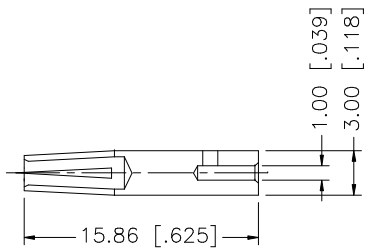

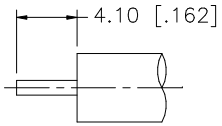

RECOMMENDED CABLE STRIPPING DIM'S

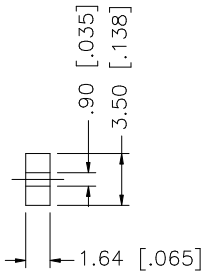

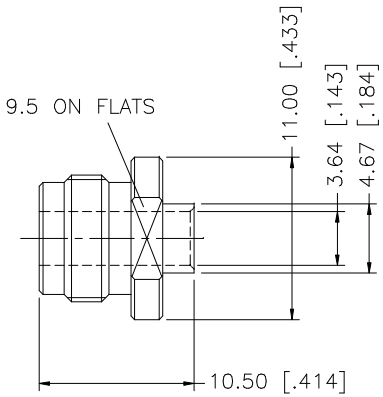

NOTE:

1. CRIMPED CONTACT PIN
   HEX. CRIMP SIZE .100"

	DESCRIPTION	MATERIAL	FINISH	QTY
8				
7				
6				
5	SOLDER NUT	BRASS	NEXCOTE	1
4	INSULATOR	TEFLON	NATURAL	1
3	CONTACT PIN	PHOS. BRONZE	GOLD	1
2	INSULATOR	TEFLON	NATURAL	1
1	BODY	BRASS	NEXCOTE	1

UNLESS OTHERWISE SPECIFIED DIMENSIONS ARE IN MILLIMETERS. DIMENSIONS IN [ ] ARE IN INCHES AND FOR CUSTOMER REFERANCE ONLY.

UNLESS OTHERWISE SPECIFIED TOLERANCES FOR MILLIMETERS ARE:
0.5 – 8mm ± 0.20mm
8 – 30mm ± 0.40mm
30 – 120mm ± 0.50mm

UNLESS OTHERWISE SPECIFIED TOLERANCES FOR INCHES ARE:
.020 – .315 = ± 0.007"
.315 – 1.180 = ± 0.015"
1.180 – 4.724 = ± 0.020"

DO NOT SCALE DRAWING

APPROVALS		DATE
DRAWN	G.R.S.	01/30/04
CHECKED		
ISSUED		
SHEET	1 OF 1	
CAD FILE	C:/172/172170.DWG	

Amphenol Connex

PART DESCRIPTION
N PANEL DIRECT SOLDER JACK
(FOR .141" SEMI RIGID CABLE)

PART NO. 172170

DWG. NO. 172170.DWG | REV. A | SIZE A | SCALE NA