REV.	DATE	DESCRIPTION
NC	02/27/01	INITIAL RELEASE

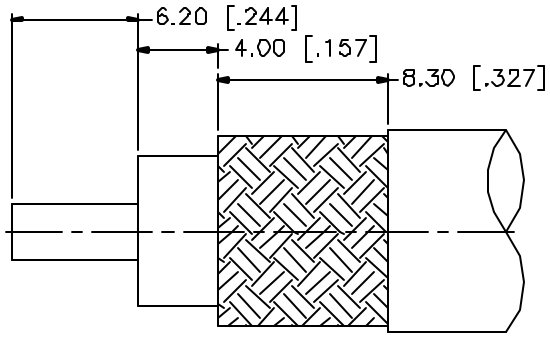

RECOMMENDED
CABLE STRIPPING DIM'S

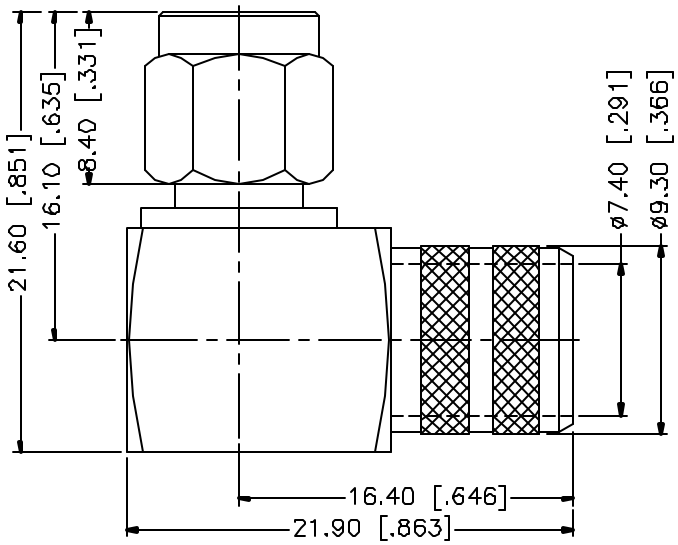

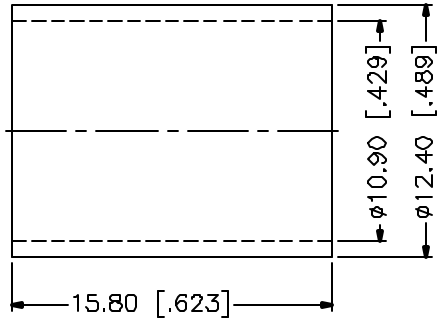

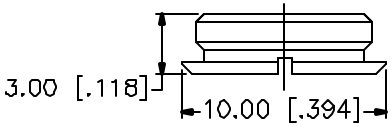

	DESCRIPTION	MATERIAL	FINISH
1	BODY	BRASS	GOLD
2	INSULATOR	TEFLON	NATURAL
3	CONTACT PIN	BRASS	GOLD
4	FERRULE	COPPER	GOLD
5	COVER	BRASS	GOLD
6			
7			
8			

UNLESS OTHERWISE SPECIFIED DIMENSIONS ARE IN MILLIMETERS

DIMENSIONS IN [ ] ARE IN INCHES FOR CUSTOMER REFERANCE ONLY

UNLESS OTHERWISE SPECIFIED TOLERANCES FOR MILLIMETERS ARE:

0.5–6 = ± 0.2
6–30 = ± 0.4
30–120 = ± 0.6
120–315 = ± 1
315–1000 = ± 1.5
1000–2000 = ± 2.4

DO NOT SCALE DRAWING

APPROVALS		DATE
DRAWN	G.R.S.	02/27/01
CHECKED		
ISSUED		

Connector Corporation

TITLE: SMA R/A CRIMP PLUG (FOR BELDEN 9913, 9914, TIME U/R-400 CABLE)

SIZE	FSCM NO	DWG. NO	REV.
A	99001	132299.DWG	NC

SCALE	PART NO.	SHEET
NA	132299	1 OF 1