REV.	DATE	DESCRIPTION
NC	08/04/98	INITIAL RELEASE

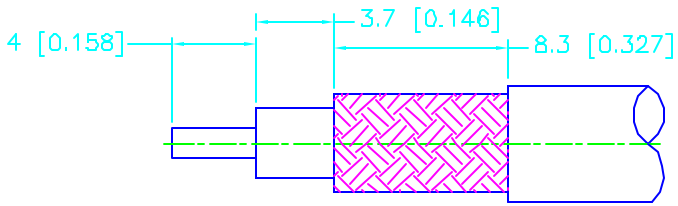

RECOMMENDED
CABLE STRIPPING DIM'S

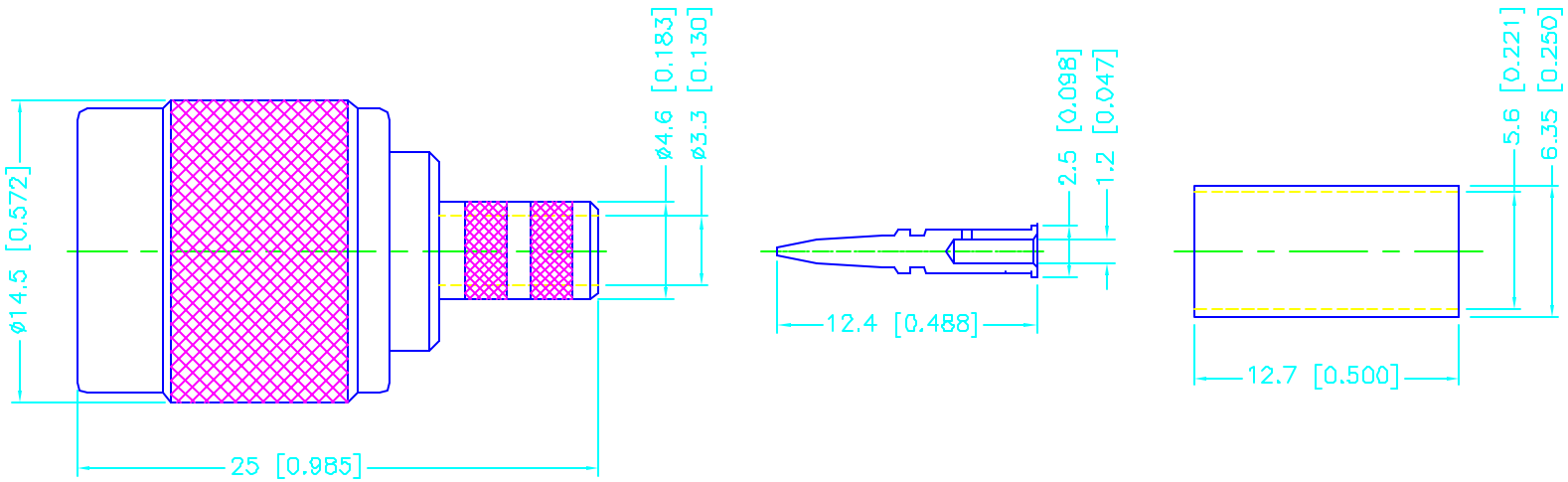

	DESCRIPTION	MATERIAL	FINISH
1	SHELL	BRASS	NICKEL
2	BODY	BRASS	NICKEL
3	INSULATOR	TEFLON	NATURAL
4	CONTACT PIN	BRASS	GOLD
5	FERRULE	BRASS	NICKEL
6			
7			
8			

UNLESS OTHERWISE SPECIFIED DIMENSIONS ARE IN MILLIMETERS

DIMENSIONS IN [ ] ARE IN INCHES FOR CUSTOMER REFERANCE ONLY

UNLESS OTHERWISE SPECIFIED TOLERANCES FOR MILLIMETERS ARE:
0.5–6 = ± 0.2
6–30 = ± 0.4
30–120 = ± 0.6
120–315 = ± 1
315–1000 = ± 1.6
1000–2000 = ± 2.4

DO NOT SCALE DRAWING

APPROVALS		DATE
DRAWN	G.R.S.	08/04/98
CHECKED		
ISSUED		

Connex
Connector Corporation

TITLE: TNC CRIMP PLUG – LMR 200

SIZE	FSCM NO.	DWG. NO.	REV.
A	99001	122410.DWG	NC

SCALE	PART NO.	SHEET
NA	122410	1 OF 1