REV.	DATE	DESCRIPTION
A	11/19/03	UPDATE DRAWING FORMAT

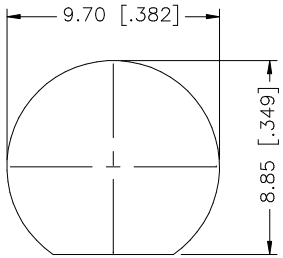

RECOMMENDED
MOUNTING HOLE

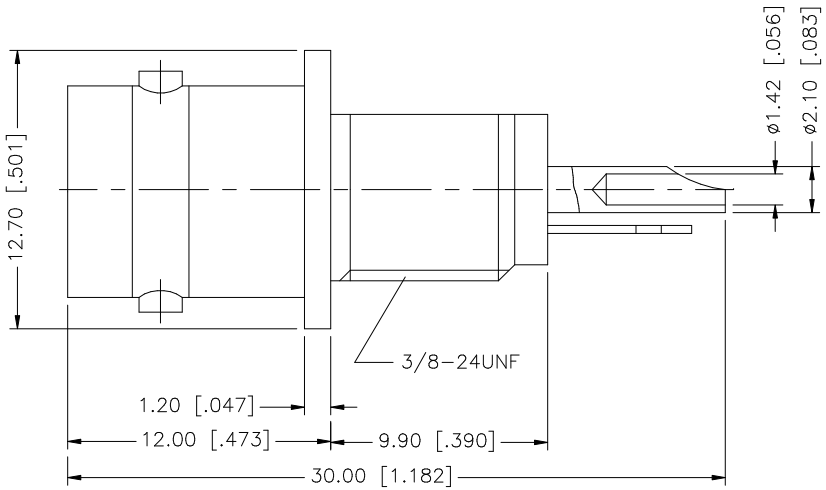

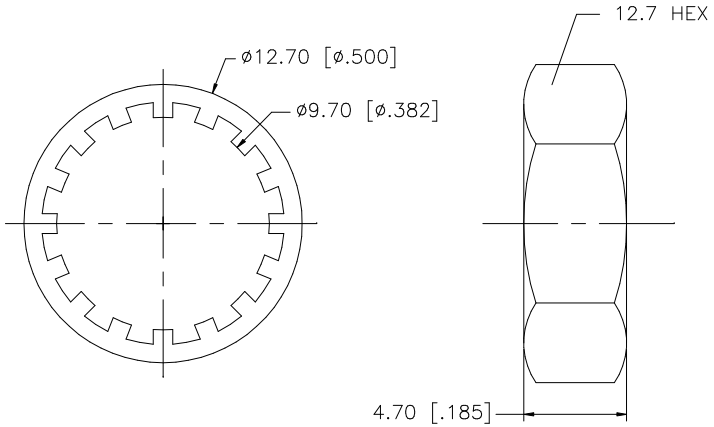

NOTE:

1. MAX. PANEL THICKNESS = 3.2mm
2. RECOMMENDED TORQUE: A MAXIMUM 12 INCH-LBS MAY BE APPLIED ON HEX NUT WHEN MOUNTING CONNECTOR IN PANEL

	DESCRIPTION	MATERIAL	FINISH	QTY
8				
7				
6				
5	HEX NUT	BRASS	NICKEL	1
4	LOCK WASHER	BRASS	NICKEL	1
3	CONTACT PIN	PHOS. BRONZE	GOLD	1
2	INSULATOR	TEFLON	NATURAL	1
1	BODY	BRASS	NICKEL	1

UNLESS OTHERWISE SPECIFIED DIMENSIONS ARE IN MILLIMETERS. DIMENSIONS IN [ ] ARE IN INCHES AND FOR CUSTOMER REFERANCE ONLY.

UNLESS OTHERWISE SPECIFIED TOLERANCES FOR MILLIMETERS ARE:
0.5 – 8mm ± 0.20mm
8 – 30mm ± 0.40mm
30 – 120mm ± 0.50mm

UNLESS OTHERWISE SPECIFIED TOLERANCES FOR INCHES ARE:
.020 – .315 = ± 0.007"
.315 – 1.180 = ± 0.015"
1.180 – 4.724 = ± 0.020"

DO NOT SCALE DRAWING

APPROVALS		DATE
DRAWN	G.R.S.	11/19/03
CHECKED		
ISSUED		
SHEET	1 OF 1	
CAD FILE	C:/112/112431.DWG	

Amphenol Connex

PART DESCRIPTION
BNC BULKHEAD RECEPTACLE
ISOLATED JACK – 50ohm

PART NO. 112431

DWG. NO.	REV.	SIZE	SCALE
112431.DWG	A	A	NA